VORTEX

Catálogo de Piezas de Clutch

¿Quiénes somos?

- Somos una empresa dedicada a la comercialización de repuestos automotrices de alta calidad directamente desde la fábrica.
- Nos especializamos en la distribución de repuestos para vehículos en América Central, América del Sur y el Caribe.

Nuestra Misión

Ofrecer repuestos automotrices de alta calidad con un servicio excepcional y un apoyo integral en cada país de América Latina.

Nuestra Visión

Ser el proveedor líder de repuestos automotrices en América Latina, reconocidos por nuestra calidad, confiabilidad y servicio al cliente.

“EL FUTURO ES AHORA”

Capacidad de I+D

Gestión de almacén y logística de primera clase

Sala de exhibición de productos competitivos de primera clase

Técnica de tratamiento térmico de primera clase

Método de prueba en línea de primera clase

Usamos nuestra especialidad para brindarte la solución tecnológica ideal

Catálogo de Piezas de Clutch Vortex

Proceso de metalurgia de primera clase

Equipos de troquelado de primera clase

Laboratorio de primera clase

www.vortexautoparts.com
info@vortexautoparts.com
F&F Tower, Oficina 33-A, Calle 50, Ciudad de Panamá

AMERICAN MEDIUM DUTY TRUCKS

NO	MODEL	CLUTCH DISC			CLUTCH COVER		
		MH No.	REF No.	SIZE	MH No.	REF No.	SIZE
FORD							
1		MFDD104	HB1391	240*160*10*29	MFDC107	HE5584	243*152.5*270
2		MFDD105	HB1392	240*160*23*26.1	MFDC107	HE5584	243*152.5*270
3		MFDD106	1862 348 031	240*160*23*26.3	MFDC108	3082196131	240*154*273
4		MFDD107	1862 179 033	240*160*23*26.3	MFDC109	FD-09/HE4948	240*152*273
5		MFDD014	FD-36	264*165*10*27.2	MFDC110	AMC-49/CA1675	268*162*289
6		MGMD004	AM-07/CD4187	264*165*10*29	MFDC110	AMC-49/CA1675	269*161*295.28
7		MFDD108	AM-24	264*165*23*25.82	MFDC110	AMC-49/CA1675	269*161*295.28
8	F-150	MFDD016	CD1226	280*165*10*27.6	MFDC201	CA0049	280*162*314.3
9		MFDD201	CD1040	280*165*10*32	MFDC202	CA0065	282*162*314.3
10		MFDD202	CD1064	280*165*10*32	MFDC202	CA0065	282*162*314.3
11	B250	MFDD203	CD80069	280*165*19*25.4	MFDC203	CA70082	280*165
12		MFDD204	CD1035	280*165*10*27.6	MFDC112	CA0064	280*178*314.3
13		MFDD016	CD1226	280*165*10*27.6	MFDC111	CA1009	282*172*314.33
14		MFDD205	CD0845	280*165*10*27.6	MFDC204	CA0033	280*165
15		MFDD206	CD1011	280*165*10*27.6	MFDC204	CA0033	280*165
16		MFDD016	CD1226	280*165*10*27.6	MFDC204	CA0033	280*165
17		MFDD016	CD1226	280*165*10*27.6	MFDC205	CA0465	280*165
18		MFDD205	CD0845	280*165*10*27.6	MFDC205	CA0465	280*165
19		MFDD207	CD80136	293*165*10*27.6	MFDC206	CA70153	295*211*314.3
20		MFDD208	CD80133	280*165*10*27.6	MFDC207	CA70152	282*170*314.3
21		MFDD016	CD1226	280*165*10*27.6	MFDC208	CA7350	280*165*314.3
22		MFDD209	CD4163	280*165*23*25.4	MFDC206	CA7350	280*165*314.3
23		MFDD210	CD1030	300*172*10*32	MFDC209	CA0058	312*195*344.8
24		MFDD211	CD1059	300*172*10*27.6	MFDC210	CA0060	301*162*327
25		MFDD212	CD80085	300*172*10*32	MFDC211	CA70100	302*170*320.68
26		MFDD213	CD80087	300*172*10*32	MFDC212	CA70102	311*188*344.8
27		MFDD214	CD1227	300*172*10*27.6	MFDC213	CA1015	304.5*162*327
28		MFDD214	281227	300*172*10*27.6	MFDC214	CA1011	300*172
29	BRONCO	MFDD109	AM-48/CD1028	280*198*10*27.45	MFDC112	FDC-08/CA0064	282*172*314.33
30		MBFD001	HB3159	300*190*10*35	MFDC113	HA3019	300*180*339
31		MGMD006	CD4024	302*171.5*10*28.6	MFDC114	CA1909	302*170.5*320.68
32		MFDD017	CD0629	327*178*10*35.4	MFDC215	CA0539	327*178
33		MFDD215	CD80240	327*178*10*32	MFDC216	CA70253	331*243*364
34		MFDD017	CD0629	327*178*10*35.4	MFDC115	CA0386	327*174.5*358.78
35		MFDD216	CD80297/CD80217	327*178*10*35.4	MFDC217	CA70241/CA1939	331*205*358.78
36		MFDD217	384233HD	327*178*10*32	MFDC217	CA1939	331*205*358.78
37		MFDD218	384229HD	327*178*10*35.4	MFDC217	CA1939	331*205*358.78
38		MGMD011	CD2876	327*178*10*38.1	MFDC117	CA1882	327*174.5*358.78
39		MGMD011	CD2876CB	328*178*10*38.1	MFDC116	CA1919	325*180*359
40		MFDD017	CD0629	328*178*10*35	MFDC116	CA1919	325*180*359
41		MFDD018	CD2824	328*178*10*38.1	MFDC118	CA1866/CA1239	329.2x190x368.6
42		MFDD019	2R0141331A	330*210*10*35	MFDC119	2R0141025A	330*210

AMERICAN MEDIUM DUTY TRUCKS

NO	MODEL	CLUTCH DISC			CLUTCH COVER		
		MH No.	REF No.	SIZE	MH No.	REF No.	SIZE
CHEVROLET							
43		MCVD004	GM-15	264*165*26*29.64	MAMC103	AMC-49/CA1675	269*161*295.28
44	BLAZER V-6	MGMD102	AM-53	280*165*10*28.9	MAMC104	AMC-29	285*162*320.68
45		MGMD009	AM-06	280*165*10*29	MAMC104	AMC-29	285*162*320.68
46	ASTRO V-6	MGMD103	AM-19	280*165*14*25	MAMC104	AMC-29	285*162*320.68
47	CAMINO V-6	MGMD104	AM-40	280*165*23*25.8	MAMC104	AMC-29	285*162*320.68
48		MGMD005	CD4148	280*165*26*28.5	MCVC201	CA5505	285*162*320.68
49		MCVD201	CD80033	280*165*26*28.5	MCVC202	CA70043	280*165
50		MGMD009	CD3348	280*165*10*28.9	MCVC203	CA5473	280*165
51		MFDO209	CD4163	280*165*23*25.8	MCVC203	CA5473	280*165
52		MCVD202	CD3904	300*172*10*28.6	MFDC114	CA1909	300*172
53		MCVD202CB	CD3904CB	300*172*10*28.6	MFDC114	CA1909	300*172
54		MCVD203	CD4172/383946	300*172*10*27.2	MFDC114	CA1909	300*172
55		MCVD204	CD4195	300*172*10*28.6	MFDC114	CA1909	300*172
56		MCVD202	CD3904	300*172*10*28.6	MCVC204	CA1862	300*172
57		MCVD202CB	CD3904CB	300*172*10*28.6	MCVC204	CA1862	300*172
58		MCVD203	CD4172/383946	300*172*10*27.2	MCVC204	CA1862	303*162*320.68
59		MCVD205	CD80132	280*165*10*28.9	MCVC205	CA70149	280*165
60		MGMD009	CD3348	280*165*10*28.9	MCVC206	CA1877	280*165
61		MCVD206	CD4220	280*165*10*28.9	MCVC206	CA1877	280*165
62		MCVD207	CD4212	280*165*14*25.4	MCVC206	CA1877	280*165
63		MCVD205	CD80132	280*165*10*28.9	MCVC207	CA70150	280*165
64		MCVD208	CD80042	300*172*10*28.6	MCVC208	CA70054	300*172
65		MGMD011	CD2876	327*185*10*38.1	MCVC209	CA1237	327*185
66		MCVD209CB	CD4182CB	327*185*10*38.1	MFDC118	CA1239/CA1866	327*185
67		MCVD209CB	CD4182CB	327*185*10*38.1	MCVC209	CA1237	327*185
68		MGMD011	CD2876/CD2824	327*185*10*38.1	MFDC118	CA1239/CA1866	327*185
DODGE							
69		MFDO209	CD4163	280*165*23*26.3	MDDC201	CA1858	280*165
70		MDDO201	CD80227	300*172*10*32	MDDC202	LC1989	300*172
71		MDDO202	CD80220	300*172*10*32	MDDC203	CA1984	300*172
GM							
72		MGMD201	CD80103	300*172*10*28.9	MGMC201	CA70119	300*172
73		MGMD202	384223HD	300*172*10*28.9	MGMC202	361930/CA1987	300*172
74		MGMD203	CD1046	325*185*10*32	MGMC203	CA0087	325*185
75		MGMD204	CD80264/LD1935	325*185*10*38.1	MGMC204	CA70279/CA1947	325*185
76		MGMD205	384234HD	325*185*10*35	MGMC204	CA70279	325*185

AMERICAN MEDIUM DUTY TRUCKS

NO.1

MODEL	FORD	MODEL	FORD
SIZE	240*160*10*29	SIZE	243*152.5*270
REF NO.	HB1391	REF NO.	HE5584
MH NO.	MFDD104	MH NO.	MFDC107

NO.2

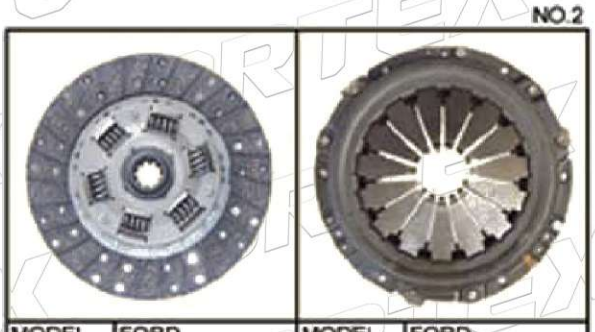

MODEL	FORD	MODEL	FORD
SIZE	240*160*23*26.1	SIZE	243*152.5*270
REF NO.	HB1392	REF NO.	HE5584
MH NO.	MFDD105	MH NO.	MFDC107

NO.3

MODEL	FORD	MODEL	FORD
SIZE	240*160*23*26.3	SIZE	240*154*273
REF NO.	1862 348 031	REF NO.	3082196131
MH NO.	MFDD106	MH NO.	MFDC108

NO.4

MODEL	FORD	MODEL	FORD
SIZE	240*160*23*26.3	SIZE	240*152*273
REF NO.	1862 179 033	REF NO.	FD-09/HE4948
MH NO.	MFDD107	MH NO.	MFDC109

NO.5

MODEL	FORD	MODEL	FORD
SIZE	264*165*10*27.2	SIZE	268*162*289
REF NO.	FD-36	REF NO.	AMC-49/CA1675
MH NO.	MFDD014	MH NO.	MFDC110

NO.6

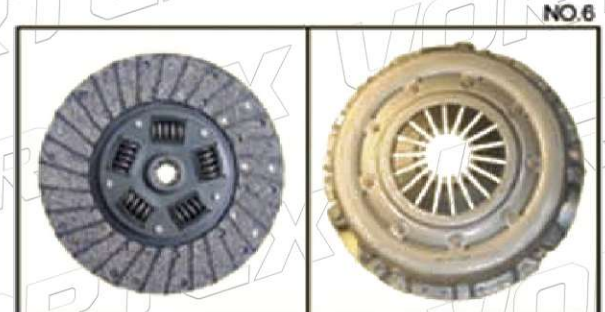

MODEL	FORD	MODEL	FORD
SIZE	264*165*10*29	SIZE	269*161*295.28
REF NO.	AM-07/CD4187	REF NO.	AMC-49/CA1675
MH NO.	MGMD004	MH NO.	MFDC110

NO.7

MODEL	FORD	MODEL	FORD
SIZE	264*165*23*25.82	SIZE	269*161*295.28
REF NO.	AM-24	REF NO.	AMC-49/CA1675
MH NO.	MFDD108	MH NO.	MFDC110

NO.8

MODEL	Ford F-150	MODEL	Ford F-150
SIZE	280*165*10*27.6	SIZE	280*165*314.3
REF NO.	CD1226	REF NO.	CA0049
MH NO.	MFDD016	MH NO.	MFDC201

AMERICAN MEDIUM DUTY TRUCKS

NO.9

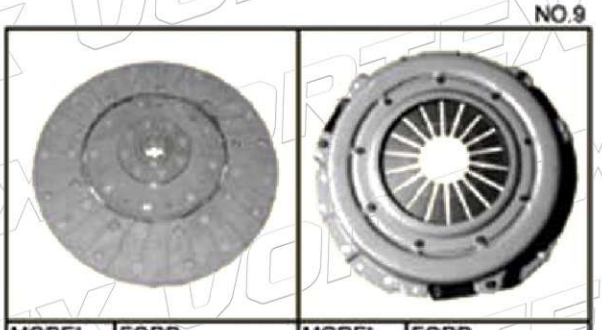

MODEL	FORD	MODEL	FORD
SIZE	280*165*10*32	SIZE	280*165*314.3
REF NO.	CD1040 rigid	REF NO.	CA0065
MH NO.	MFDD201	MH NO.	MFDC202

NO.10

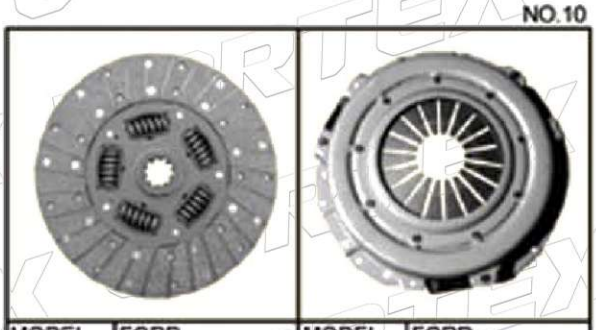

MODEL	FORD	MODEL	FORD
SIZE	280*165*10*32	SIZE	280*165*314.3
REF NO.	CD1064	REF NO.	CA0065
MH NO.	MFDC202	MH NO.	MFDC202

NO.11

MODEL	FORD B250	MODEL	FORD B250
SIZE	280*165*19*25.4	SIZE	280*165
REF NO.	CD80069	REF NO.	CA70062
MH NO.	MFDD203	MH NO.	MFDC203

NO.12

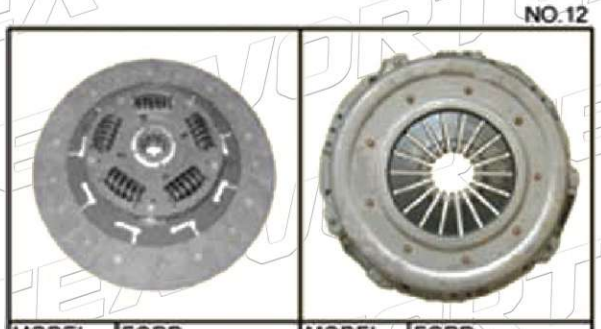

MODEL	FORD	MODEL	FORD
SIZE	280*165*10*27.6	SIZE	280*165*314.3
REF NO.	CD1035	REF NO.	CA0064
MH NO.	MFDD204	MH NO.	MFDC112

NO.13

MODEL	FORD	MODEL	FORD
SIZE	280*165*10*27.6	SIZE	282*172*314.3
REF NO.	CD1226	REF NO.	CA1009
MH NO.	MFDD016	MH NO.	MFDC111

NO.14

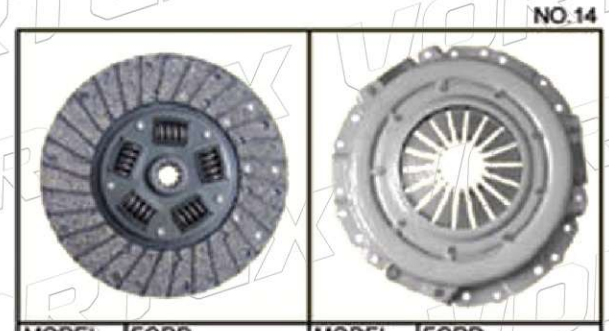

MODEL	FORD	MODEL	FORD
SIZE	280*165*10*27.6	SIZE	280*165
REF NO.	CD0845	REF NO.	CA0033
MH NO.	MFDD205	MH NO.	MFDC204

NO.15

MODEL	FORD	MODEL	FORD
SIZE	280*165*10*27.6	SIZE	280*165
REF NO.	CD1011	REF NO.	CA0033
MH NO.	MFDD206	MH NO.	MFDC204

NO.16

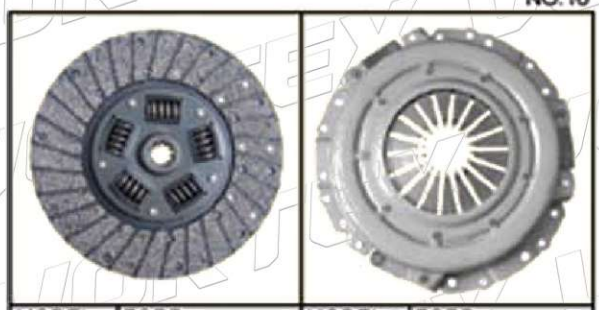

MODEL	FORD	MODEL	FORD
SIZE	280*165*10*27.6	SIZE	280*165
REF NO.	CD1226	REF NO.	CA0033
MH NO.	MFDD016	MH NO.	MFDC204

AMERICAN MEDIUM DUTY TRUCKS

NO.17

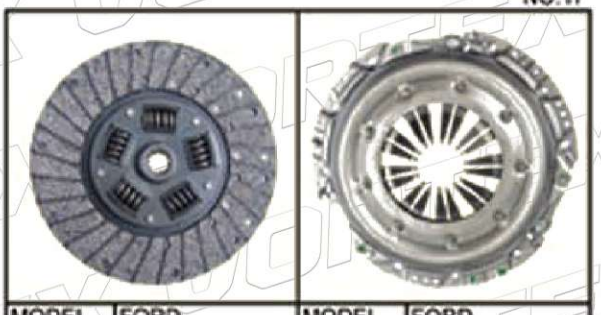

MODEL	FORD	MODEL	FORD
SIZE	280*165*10*27.6	SIZE	280*165
REF NO.	CD1226	REF NO.	CA0465
MH NO.	MFDD016	MH NO.	MFDC205

NO.18

MODEL	FORD	MODEL	FORD
SIZE	280*165*10*27.6	SIZE	280*165
REF NO.	CD0845	REF NO.	CA0465
MH NO.	MFDD205	MH NO.	MFDC205

NO.19

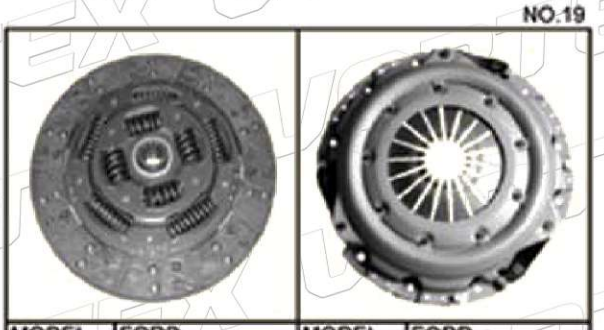

MODEL	FORD	MODEL	FORD
SIZE	293*165*10*27.6	SIZE	11"
REF NO.	CD80136	REF NO.	CA70153
MH NO.	MFDD207	MH NO.	MFDC206

NO.20

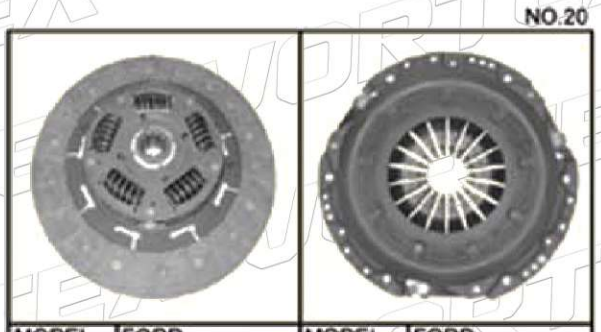

MODEL	FORD	MODEL	FORD
SIZE	280*165*10*27.6	SIZE	282*170*314.3
REF NO.	CD80133	REF NO.	CA70152
MH NO.	MFDD208	MH NO.	MFDC207

NO.21

MODEL	FORD	MODEL	FORD
SIZE	280*165*10*27.6	SIZE	280*165*314.3
REF NO.	CD1226	REF NO.	CA7350
MH NO.	MFDD016	MH NO.	MFDC208

NO.22

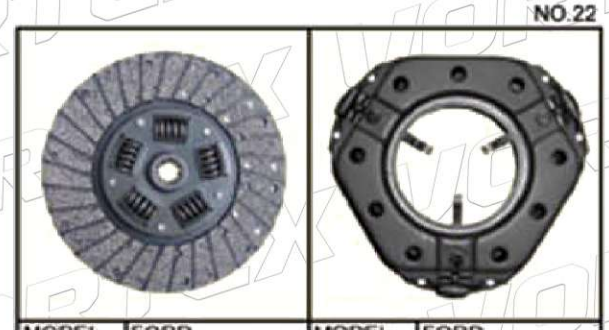

MODEL	FORD	MODEL	FORD
SIZE	280*165*23*25.4	SIZE	280*165*314.3
REF NO.	CD4163	REF NO.	CA7350
MH NO.	MFDD209	MH NO.	MFDC208

NO.23

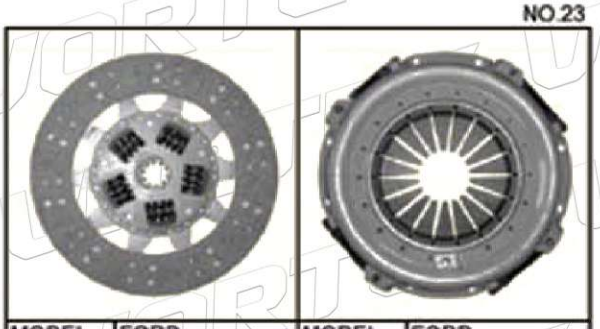

MODEL	FORD	MODEL	FORD
SIZE	300*172*10*32	SIZE	312*195*344.8
REF NO.	CD1030	REF NO.	CA0058
MH NO.	MFDD210	MH NO.	MFDC209

NO.24

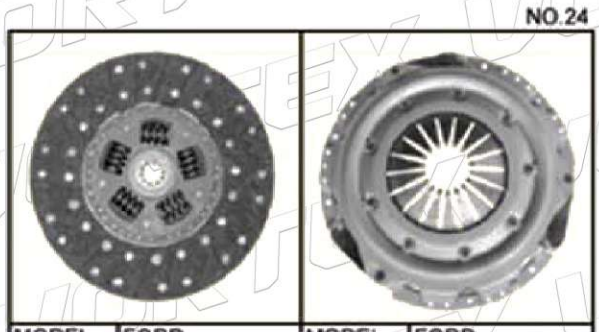

MODEL	FORD	MODEL	FORD
SIZE	300*172*10*27.6	SIZE	301*162*327
REF NO.	CD1059	REF NO.	CA0080
MH NO.	MFDD211	MH NO.	MFDC210

AMERICAN MEDIUM DUTY TRUCKS

NO.25

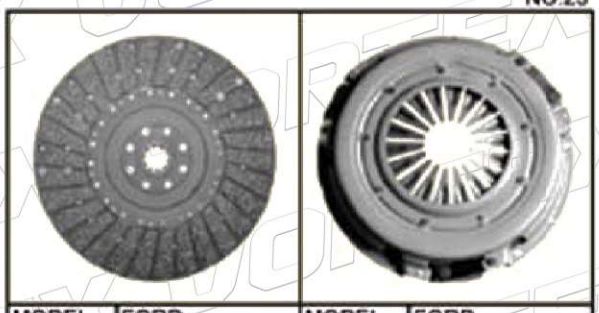

MODEL	FORD	MODEL	FORD
SIZE	300*172*10*32	SIZE	302*170*320.68
REF NO.	CD80085	REF NO.	CA70100
MH NO.	MFDD212	MH NO.	MFDC211

NO.26

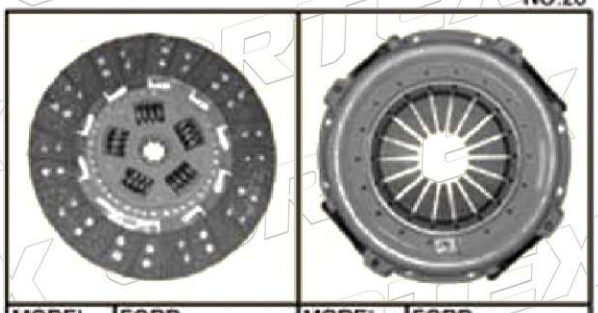

MODEL	FORD	MODEL	FORD
SIZE	300*172*10*32	SIZE	311*188*344.8
REF NO.	CD80087	REF NO.	CA70102
MH NO.	MFDD213	MH NO.	MFDC212

NO.27

MODEL	FORD	MODEL	FORD
SIZE	300*172*10*27.6	SIZE	304.5*162*327
REF NO.	CD1227	REF NO.	CA1015
MH NO.	MFDD214	MH NO.	MFDC213

NO.28

MODEL	FORD	MODEL	FORD
SIZE	300*172*10*27.6	SIZE	300*172
REF NO.	281227	REF NO.	CA1011
MH NO.	MFDD214	MH NO.	MFDC214

NO.29

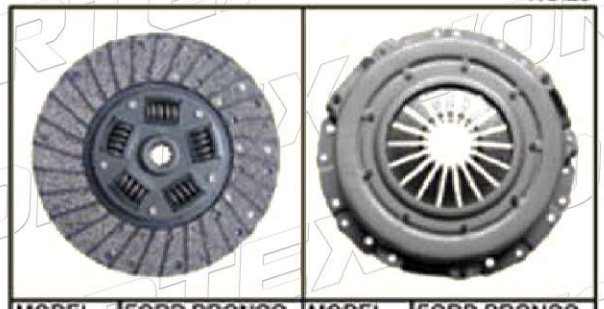

MODEL	FORD BRONCO	MODEL	FORD BRONCO
SIZE	280*198*10*27.45	SIZE	282*172*314.33
REF NO.	AM-48/CD1028	REF NO.	FDC-08/CA0064
MH NO.	MFDD109	MH NO.	MFDC112

NO.30

MODEL	FORD	MODEL	FORD
SIZE	300*190*10*35	SIZE	300*180*339
REF NO.	HB3159	REF NO.	HA3019
MH NO.	MBFD001	MH NO.	MFDC113

NO.31

MODEL	FORD	MODEL	FORD
SIZE	302*171.5*10*28.6	SIZE	302*170.5*320.68
REF NO.	CD4024	REF NO.	CA1909
MH NO.	MGMD006	MH NO.	MFDC114

NO.32

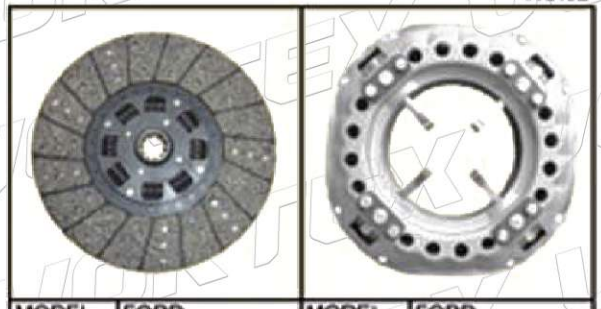

MODEL	FORD	MODEL	FORD
SIZE	327*178*10*35.4	SIZE	327*178
REF NO.	CD0629	REF NO.	CA0539
MH NO.	MFD017	MH NO.	MFDC215

AMERICAN MEDIUM DUTY TRUCKS

NO.33

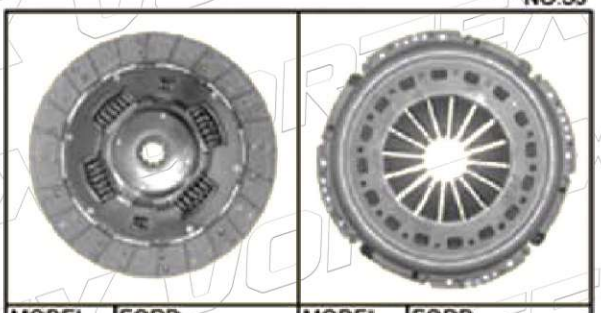

MODEL	FORD	MODEL	FORD
SIZE	327*178*10*32	SIZE	331*243*364
REF NO.	CD80240	REF NO.	CA70263
MH NO.	MFDD215	MH NO.	MFDC216

NO.34

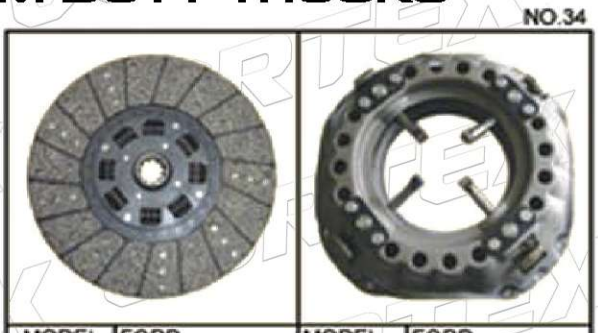

MODEL	FORD	MODEL	FORD
SIZE	327*178*10*35.4	SIZE	327*174.5*358.8
REF NO.	CD0629	REF NO.	CA0386
MH NO.	MFDD017	MH NO.	MFDC115

NO.35

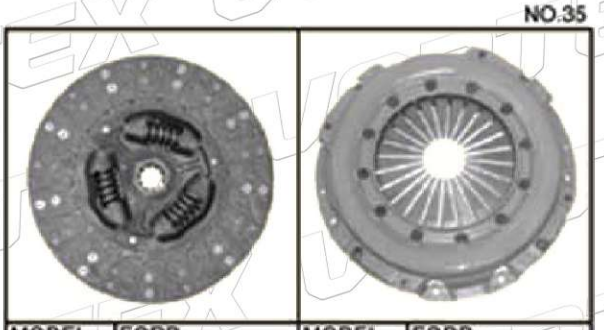

MODEL	FORD	MODEL	FORD
SIZE	327*178*10*35.4	SIZE	331*205*358.8
REF NO.	CD80297/CD80217	REF NO.	CA70241/CA1939
MH NO.	MFDD216	MH NO.	MFDC217

NO.36

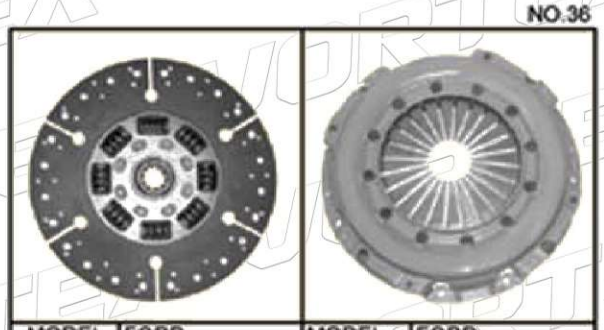

MODEL	FORD	MODEL	FORD
SIZE	327*178*10*32	SIZE	331*205*358.8
REF NO.	384233HD	REF NO.	CA70241/CA1939
MH NO.	MFDD217	MH NO.	MFDC217

NO.37

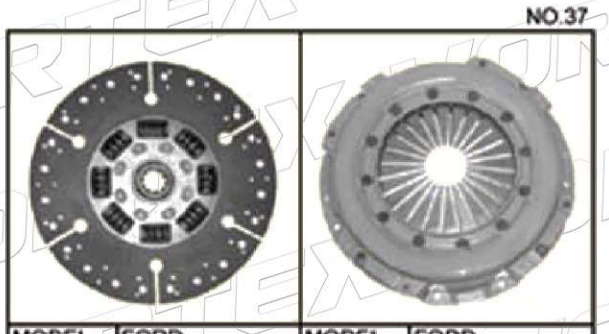

MODEL	FORD	MODEL	FORD
SIZE	327*178*10*35.4	SIZE	331*205*358.8
REF NO.	384229HD	REF NO.	CA70241/CA1939
MH NO.	MFDD218	MH NO.	MFDC217

NO.38

MODEL	FORD	MODEL	FORD
SIZE	327*178*10*35.4	SIZE	327*174.5*358.78
REF NO.	CD2876	REF NO.	CA1882
MH NO.	MGMD011	MH NO.	MFDC117

NO.39

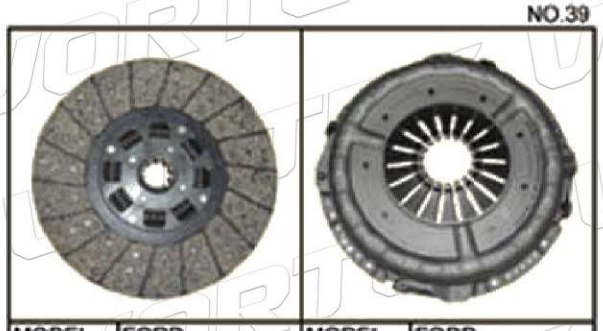

MODEL	FORD	MODEL	FORD
SIZE	327*178*10*35.4	SIZE	327*174.5*358.78
REF NO.	CD2876	REF NO.	CA1919
MH NO.	MGMD011	MH NO.	MFDC116

NO.40

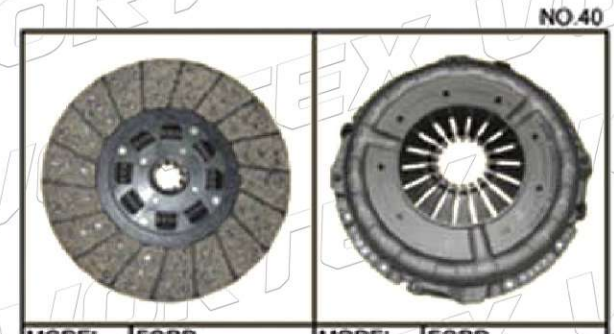

MODEL	FORD	MODEL	FORD
SIZE	327*178*10*35.4	SIZE	327*174.5*358.78
REF NO.	CD0629	REF NO.	CA1919
MH NO.	MFDD017	MH NO.	MFDC116

AMERICAN MEDIUM DUTY TRUCKS

NO.41

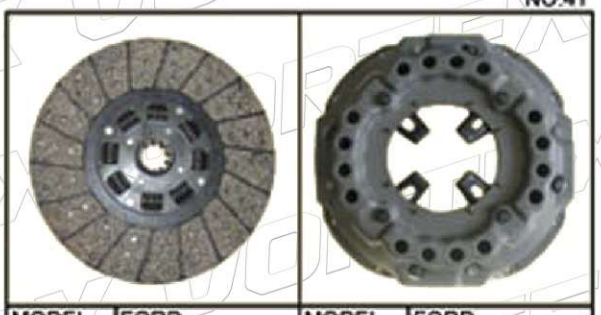

MODEL	FORD	MODEL	FORD
SIZE	328*178*10*38.1	SIZE	329.2x190x368.6
REF NO.	CD2824	REF NO.	CA1866/CA1239
MH NO.	MFDD018	MH NO.	MFDC118

NO.42

MODEL	FORD	MODEL	FORD
SIZE	330*210*10*35	SIZE	330*210
REF NO.	2R0141031A	REF NO.	2R0141025A
MH NO.	MFDD019	MH NO.	MFDC119

NO.43

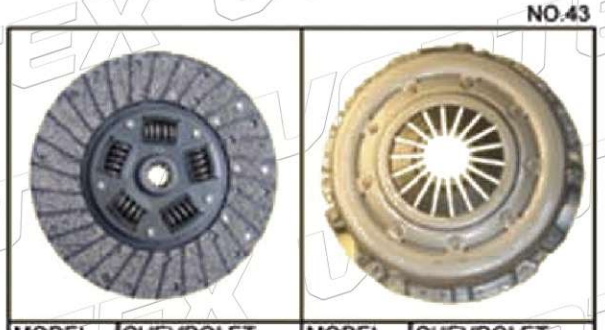

MODEL	CHEVROLET	MODEL	CHEVROLET
SIZE	264*165*26*29.64	SIZE	269*161*295.28
REF NO.	GM-15	REF NO.	AMC-49/CA1675
MH NO.	MCVD004	MH NO.	MAMC103

NO.44

MODEL	CHEVROLET	MODEL	CHEVROLET
SIZE	280*165*10*28.9	SIZE	285*162*320.68
REF NO.	AM-53/CD3348	REF NO.	AMC-29/CA5505
MH NO.	MGMD102	MH NO.	MAMC104

NO.45

MODEL	CHEVROLET	MODEL	CHEVROLET
SIZE	280*165*10*29	SIZE	285*162*320.68
REF NO.	AM-06	REF NO.	AMC-29
MH NO.	MGMD009	MH NO.	MAMC104

NO.46

MODEL	CHEVROLET	MODEL	CHEVROLET
SIZE	280*165*14*25	SIZE	285*162*320.68
REF NO.	AM-19	REF NO.	AMC-29
MH NO.	MGMD103	MH NO.	MAMC104

NO.47

MODEL	CHEVROLET	MODEL	CHEVROLET
SIZE	280*165*23*25.8	SIZE	285*162*320.68
REF NO.	AM-40/CD4163	REF NO.	AMC-29/CA5505
MH NO.	MGMD104	MH NO.	MAMC104

NO.48

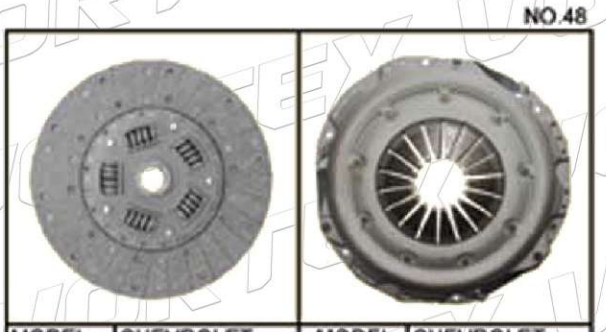

MODEL	CHEVROLET	MODEL	CHEVROLET
SIZE	280*165*23*25.8	SIZE	285*162*320.68
REF NO.	CD4148	REF NO.	CA5505
MH NO.	MGMD005	MH NO.	MCVC201

AMERICAN MEDIUM DUTY TRUCKS

NO.49

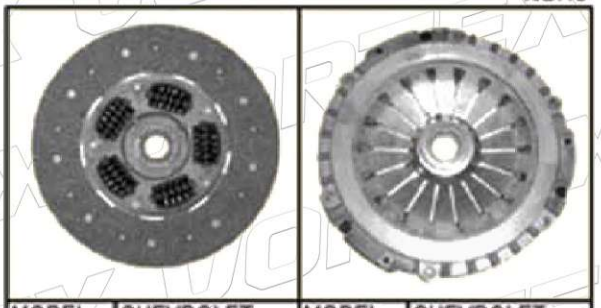

MODEL	CHEVROLET	MODEL	CHEVROLET
SIZE	280*165*26*28.5	SIZE	280*165
REF NO.	CD80033	REF NO.	CA70043
MH NO.	MCVD201	MH NO.	MCVC202

NO.50

MODEL	CHEVROLET	MODEL	CHEVROLET
SIZE	280*165*10*28.9	SIZE	280*165
REF NO.	CD3348	REF NO.	CA5473
MH NO.	MGMD009	MH NO.	MCVC203

NO.51

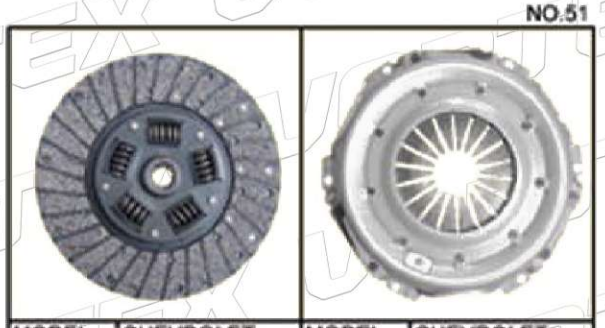

MODEL	CHEVROLET	MODEL	CHEVROLET
SIZE	280*165*23*25.8	SIZE	280*165
REF NO.	CD4163	REF NO.	CA5473
MH NO.	MFDD209	MH NO.	MCVC203

NO.52

MODEL	CHEVROLET	MODEL	CHEVROLET
SIZE	300*172*10*28.6	SIZE	300*172
REF NO.	CD3904	REF NO.	CA1909
MH NO.	MCVD202	MH NO.	MFDC114

NO.53

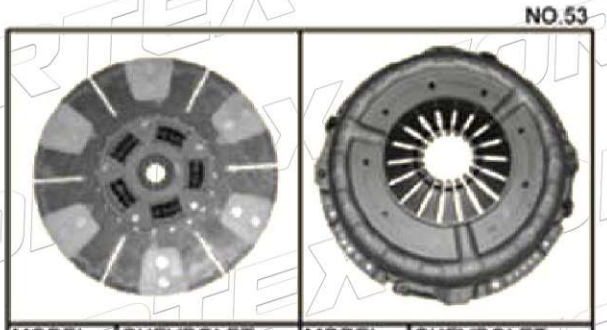

MODEL	CHEVROLET	MODEL	CHEVROLET
SIZE	300*10*28.6	SIZE	300*172
REF NO.	CD3904CB	REF NO.	CA1909
MH NO.	MCVD202CB	MH NO.	MFDC114

NO.54

MODEL	CHEVROLET	MODEL	CHEVROLET
SIZE	300*172*10*27.2	SIZE	300*172
REF NO.	CD4172/383946	REF NO.	CA1909
MH NO.	MCVD203	MH NO.	MFDC114

NO.55

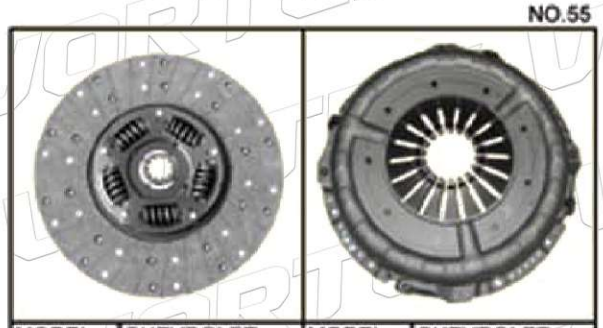

MODEL	CHEVROLET	MODEL	CHEVROLET
SIZE	300*172*10*28.6	SIZE	300*172
REF NO.	CD4195	REF NO.	CA1909
MH NO.	MCVD204	MH NO.	MFDC114

NO.56

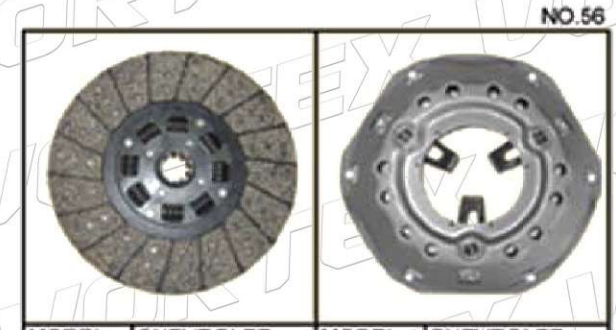

MODEL	CHEVROLET	MODEL	CHEVROLET
SIZE	300*172*10*28.6	SIZE	300*172
REF NO.	CD3904	REF NO.	CA1862
MH NO.	MCVD202	MH NO.	MCVC204

AMERICAN MEDIUM DUTY TRUCKS

NO.57

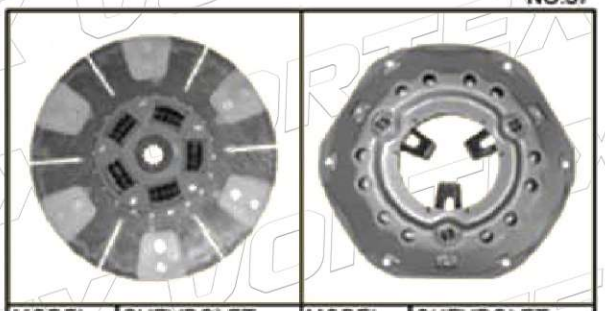

MODEL	CHEVROLET	MODEL	CHEVROLET
SIZE	300*10*28.6	SIZE	300*172
REF NO.	CD3904CB	REF NO.	CA1862
MH NO.	MCVD202CB	MH NO.	MCVC204

NO.58

MODEL	CHEVROLET	MODEL	CHEVROLET
SIZE	300*172*10*27.2	SIZE	300*172
REF NO.	CD4172/383946	REF NO.	CA1862
MH NO.	MCVD203	MH NO.	MCVC204

NO.59

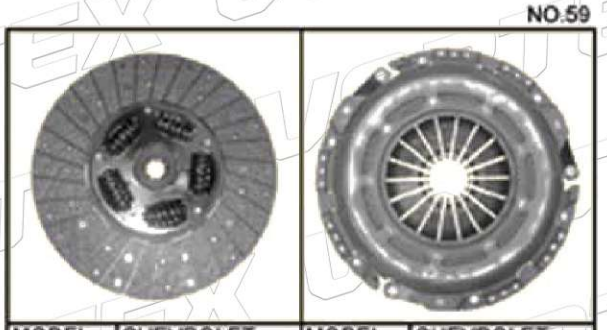

MODEL	CHEVROLET	MODEL	CHEVROLET
SIZE	280*165*10*28.9	SIZE	280*165
REF NO.	CD80132	REF NO.	CA70149
MH NO.	MCVD205	MH NO.	MCVC205

NO.60

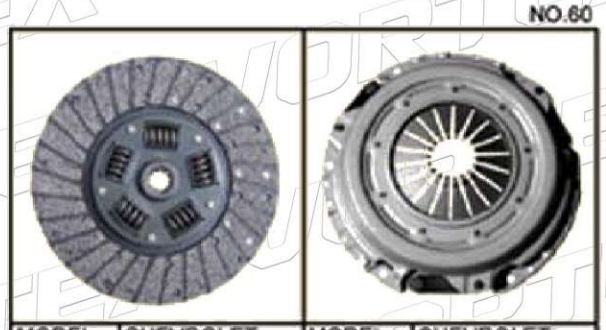

MODEL	CHEVROLET	MODEL	CHEVROLET
SIZE	280*165*10*28.9	SIZE	280*165
REF NO.	CD3348	REF NO.	CA1877
MH NO.	MGMD009	MH NO.	MCVC206

NO.61

MODEL	CHEVROLET	MODEL	CHEVROLET
SIZE	280*165*10*28.9	SIZE	280*165
REF NO.	CD4220	REF NO.	CA1877
MH NO.	MCVD206	MH NO.	MCVC206

NO.62

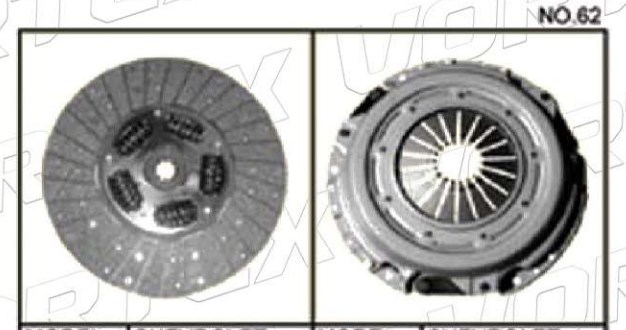

MODEL	CHEVROLET	MODEL	CHEVROLET
SIZE	280*165*14*25.4	SIZE	280*165
REF NO.	CD4212	REF NO.	CA1877
MH NO.	MCVD207	MH NO.	MCVC206

NO.63

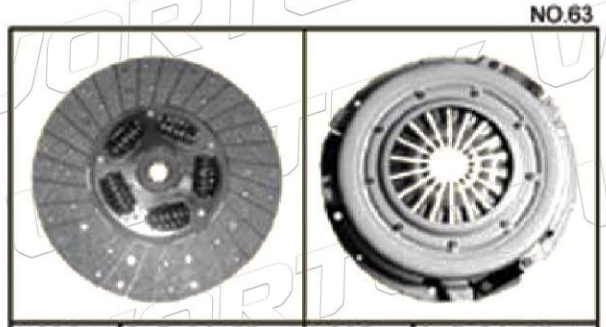

MODEL	CHEVROLET	MODEL	CHEVROLET
SIZE	280*165*10*28.9	SIZE	280*165
REF NO.	CD80132	REF NO.	CA70150
MH NO.	MCVD205	MH NO.	MCVC207

NO.64

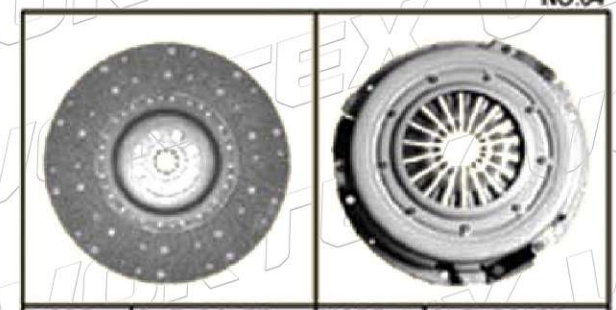

MODEL	CHEVROLET	MODEL	CHEVROLET
SIZE	300*172*10*28.6	SIZE	300*172
REF NO.	CD80042	REF NO.	CA70054
MH NO.	MCVD208	MH NO.	MVCV208

AMERICAN MEDIUM DUTY TRUCKS

NO.57

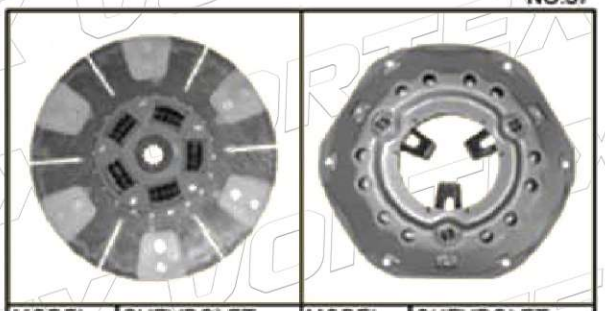

MODEL	CHEVROLET	MODEL	CHEVROLET
SIZE	300*10*28.6	SIZE	300*172
REF NO.	CD3904CB	REF NO.	CA1862
MH NO.	MCVD202CB	MH NO.	MCVC204

NO.58

MODEL	CHEVROLET	MODEL	CHEVROLET
SIZE	300*172*10*27.2	SIZE	300*172
REF NO.	CD4172/383946	REF NO.	CA1862
MH NO.	MCVD203	MH NO.	MCVC204

NO.59

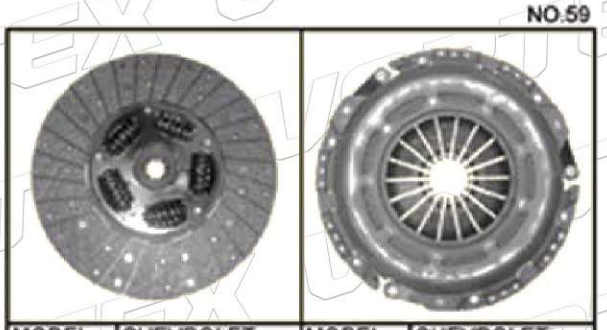

MODEL	CHEVROLET	MODEL	CHEVROLET
SIZE	280*165*10*28.9	SIZE	280*165
REF NO.	CD80132	REF NO.	CA70149
MH NO.	MCVD205	MH NO.	MCVC205

NO.60

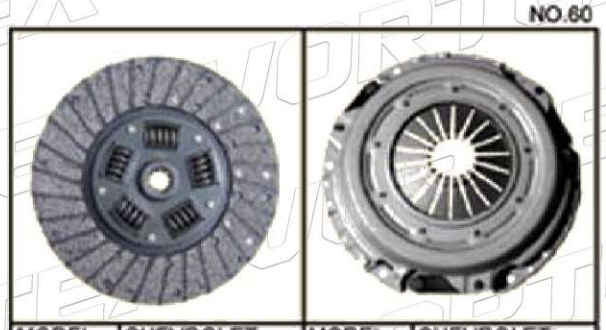

MODEL	CHEVROLET	MODEL	CHEVROLET
SIZE	280*165*10*28.9	SIZE	280*165
REF NO.	CD3348	REF NO.	CA1877
MH NO.	MGMD009	MH NO.	MCVC206

NO.61

MODEL	CHEVROLET	MODEL	CHEVROLET
SIZE	280*165*10*28.9	SIZE	280*165
REF NO.	CD4220	REF NO.	CA1877
MH NO.	MCVD206	MH NO.	MCVC206

NO.62

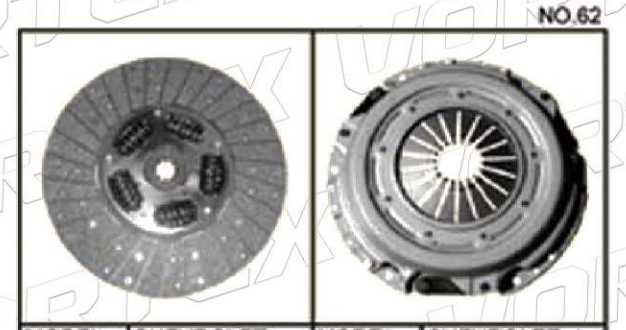

MODEL	CHEVROLET	MODEL	CHEVROLET
SIZE	280*165*14*25.4	SIZE	280*165
REF NO.	CD4212	REF NO.	CA1877
MH NO.	MCVD207	MH NO.	MCVC206

NO.63

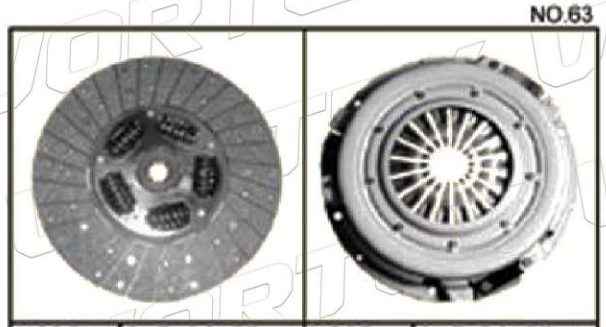

MODEL	CHEVROLET	MODEL	CHEVROLET
SIZE	280*165*10*28.9	SIZE	280*165
REF NO.	CD80132	REF NO.	CA70150
MH NO.	MCVD205	MH NO.	MCVC207

NO.64

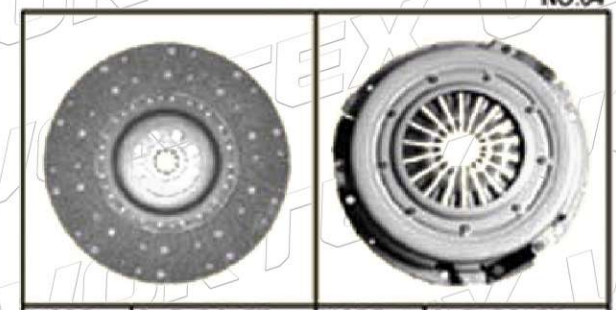

MODEL	CHEVROLET	MODEL	CHEVROLET
SIZE	300*172*10*28.6	SIZE	300*172
REF NO.	CD80042	REF NO.	CA70054
MH NO.	MCVD208	MH NO.	MVCV208

AMERICAN MEDIUM DUTY TRUCKS

NO.65

MODEL	CHEVROLET	MODEL	CHEVROLET
SIZE	327*185*10*38	SIZE	327*185
REF NO.	CD2876	REF NO.	CA1237
MH NO.	MGMD011	MH NO.	MCVC209

NO.66

MODEL	CHEVROLET	MODEL	CHEVROLET
SIZE	327*10*38.1	SIZE	327*185
REF NO.	CD4182CB	REF NO.	CA1239/CA1866
MH NO.	MCVD209CB	MH NO.	MFDC118

NO.67

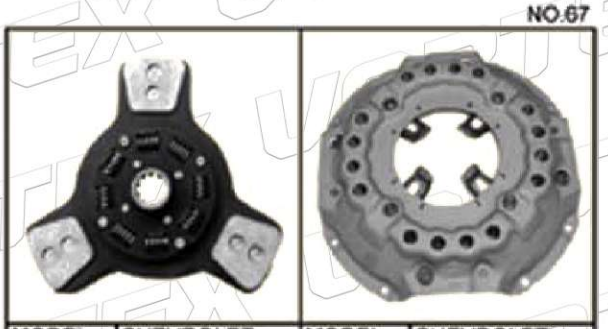

MODEL	CHEVROLET	MODEL	CHEVROLET
SIZE	327*10*38.1	SIZE	327*185
REF NO.	CD4182CB	REF NO.	CA1237
MH NO.	MCVD209CB	MH NO.	MCVC209

NO.68

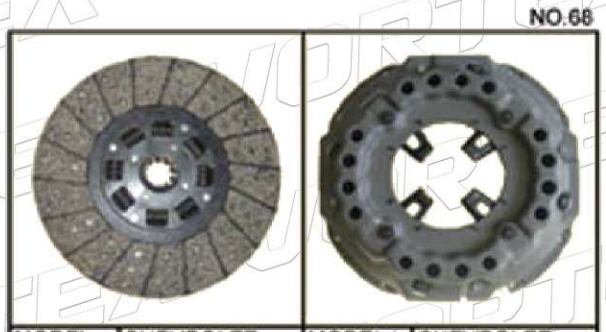

MODEL	CHEVROLET	MODEL	CHEVROLET
SIZE	327*185*10*38.1	SIZE	327*185
REF NO.	CD2876/CD2824	REF NO.	CA1239/CA1866
MH NO.	MGMD011	MH NO.	MFDC118

NO.69

MODEL	DODGE	MODEL	DODGE
SIZE	280*165*23*25.8	SIZE	280*165
REF NO.	CD4163	REF NO.	CA1858
MH NO.	MFDD209	MH NO.	MDDC201

NO.70

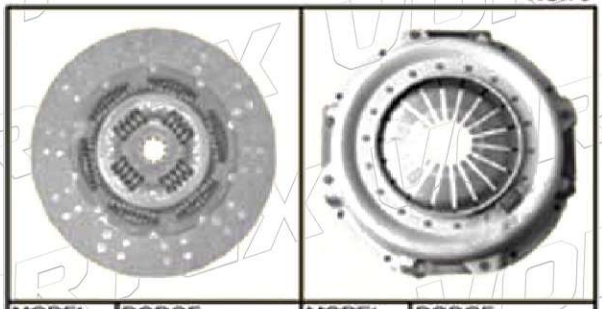

MODEL	DODGE	MODEL	DODGE
SIZE	300*172*10*32	SIZE	300*172
REF NO.	CD80227	REF NO.	LC1989
MH NO.	MDDD201	MH NO.	MDDC202

NO.71

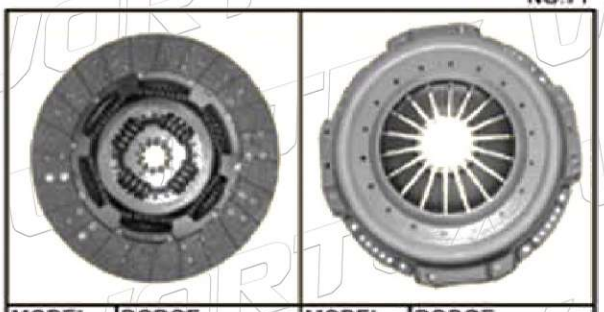

MODEL	DODGE	MODEL	DODGE
SIZE	300*172*10*32	SIZE	300*172
REF NO.	CD80220	REF NO.	CA1984
MH NO.	MDDD202	MH NO.	MDDC203

NO.72

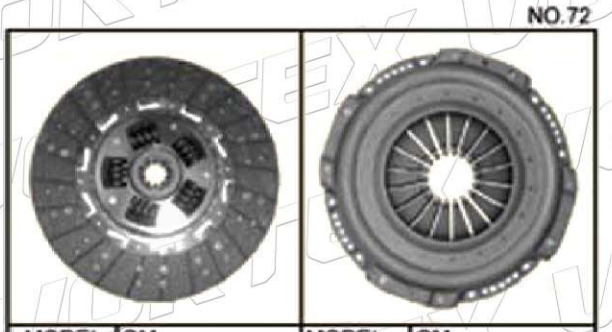

MODEL	GM	MODEL	GM
SIZE	300*172*10*28.9	SIZE	300*172
REF NO.	CD80103	REF NO.	CA70119
MH NO.	MGMD201	MH NO.	MGMC201

AMERICAN MEDIUM DUTY TRUCKS

NO.73

MODEL	GM	MODEL	GM
SIZE	300*10*28.9	SIZE	300*172
REF NO.	384223HD	REF NO.	361930/CA1987
MH NO.	MGMD202	MH NO.	MGMC202

NO.74

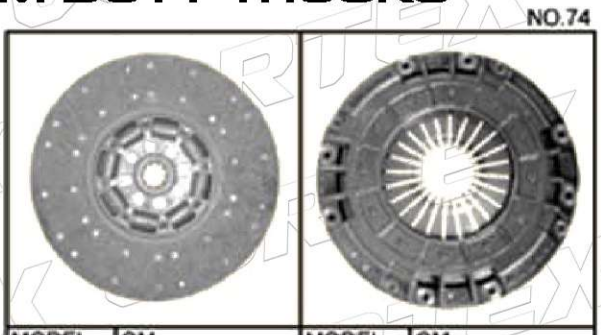

MODEL	GM	MODEL	GM
SIZE	325*185*10*32	SIZE	325*185
REF NO.	CD1046	REF NO.	CA0087
MH NO.	MGMD203	MH NO.	MGMC203

NO.75

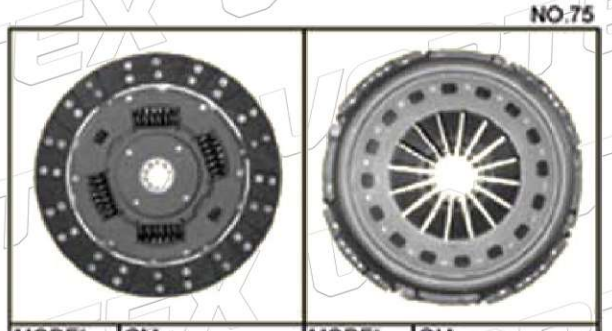

MODEL	GM	MODEL	GM
SIZE	325*185*10*38.1	SIZE	325*185
REF NO.	CD80264/LD1935	REF NO.	CA70279/CA1947
MH NO.	MGMD204	MH NO.	MGMC204

NO.76

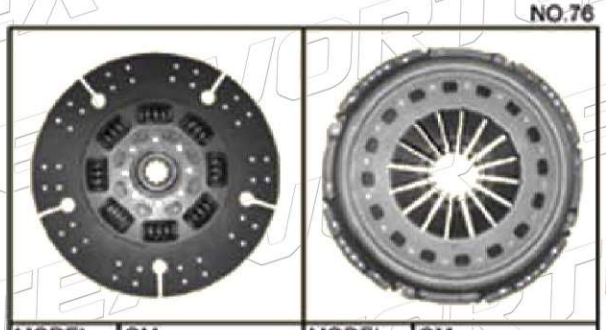

MODEL	GM	MODEL	GM
SIZE	325*10*35	SIZE	325*185
REF NO.	384234HD	REF NO.	CA70279/CA1947
MH NO.	MGMD205	MH NO.	MGMC204

PUSH TYPE CLUTCH KITS
Medium Duty Truck

MH No.	Ref No.	Torque Rating (ft/lb)	Clutch Cover			Center Plate		Clutch Disc				
			MH No.	Ref No.	Plate Load(lb)	MH No.	Ref No.	MH No. (Front & Rear)	Ref No. (Front & Rear)	No.of Windows	Facing	Buttons
310MM x 1 1/4"x10 Single Plate												
M107650-1	107650-1	400	MTTC018	102038	2400			MTTD6001	103102	6	Ceramic	4P
310MM x 1 1/2"x10 Single Plate												
M107606-1	107606-1	400	MTTC018	102038	2400			MTTD6002	103100	6	Ceramic	4P
310MM x 1 3/8"x10 Single Plate												
M107943-3	107943-3	400	MTTC018	102038	2400			MTTD6003	103122	6	Ceramic	4P
330MM x 1 1/4"x10 Single Plate												
M1928-117	NMU1928-117	400	MTTC019	NCA330-1928	2700			MTTD6004	130-009-1902	8	Ceramic	4VTL
330MM x 1 1/2"x10 Single Plate												
M1928-137	NMU1928-137	400	MTTC019	NCA330-1928	2700			MTTD6005	130-009-1904	8	Ceramic	4VTL
M1928-134	NMU1928-134	400	MTTC019	NCA330-1928	2700			MTTD6006	130-009-1804	8	Organic	
M1938-137	NMU1938-137	520	MTTC020	NCA330-1938	2400			MTTD6005	130-009-1904	8	Ceramic	4VTL
330MM x 1 3/8"x10 Single Plate												
M1938-127	NMU1938-127	400	MTTC020	NCA330-1938	2400			MTTD6007	130-009-1903	8	Ceramic	4VTL
M1938-124	NMU1938-124	400	MTTC020	NCA330-1938	2400			MTTD6008	130-019-1019	8	Organic	
365MM x 1 3/4"x10 Single Plate												
M104100-1	104100-1	520	MTTC021	138006-1	3200			MTTD6009	126666	8	Ceramic	3P
M104100-2	104100-2	660	MTTC021	138006-1	3200			MTTD6009	126666	8	Ceramic	3P
365MM x 1 3/4"x10 Two Plates												
M104200-1	138005-1	860	MTTC022	138005-1	2500	MTTP006	FW-148	MTTD6010/6011	126697/126698	8	Ceramic	3P

VORTEX

PUSH TYPE CLUTCH KITS
Medium Duty Truck

M107605-1 (310x1 1/4"x10 Single Plate)

Torque Rating: 400ft/lbs
Plate Load: 2400lbs

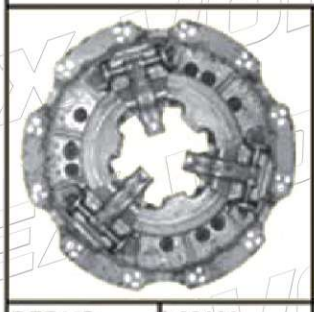

REF NO.	102038	REF NO.		REF NO.	103102	REF NO.	
MH NO.	MTTC018	MH NO.		MH NO.	MTTD6001	MH NO.	

M107606-1 (310x1 1/2"x10 Single Plate)

Torque Rating: 400ft/lbs
Plate Load: 2400lbs

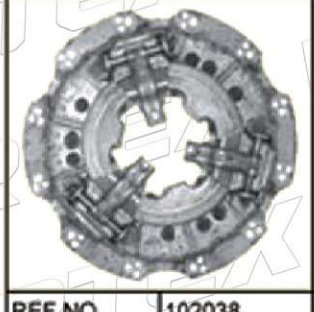

REF NO.	102038	REF NO.		REF NO.	103100	REF NO.	
MH NO.	MTTC018	MH NO.		MH NO.	MTTD6002	MH NO.	

M107943-3 (310x1 3/8"x10 Single Plate)

Torque Rating: 400ft/lbs
Plate Load: 2400lbs

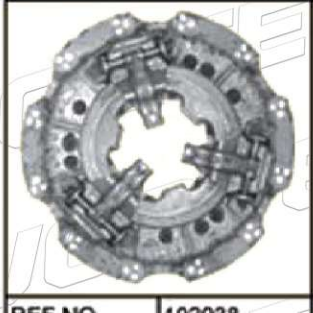

REF NO.	102038	REF NO.		REF NO.	103122	REF NO.	
MH NO.	MTTC018	MH NO.		MH NO.	MTTD6003	MH NO.	

PUSH TYPE CLUTCH KITS
Medium Duty Truck

M1928-117 (330x1 1/4"x10 Single Plate)

Torque Rating: 400ft/lbs
Plate Load: 2700lbs

REF NO.	NCA330-1928	REF NO.		REF NO.	130-009-1902	REF NO.	
MH NO.	MTTC019	MH NO.		MH NO.	MTTD6004	MH NO.	

M1928-137 (330x1 1/2"x10 Single Plate)

Torque Rating: 400ft/lbs
Plate Load: 2700lbs

REF NO.	NCA330-1928	REF NO.		REF NO.	130-009-1904	REF NO.	
MH NO.	MTTC019	MH NO.		MH NO.	MTTD6005	MH NO.	

M1928-134 (330x1 1/2"x10 Single Plate)

Torque Rating: 400ft/lbs
Plate Load: 2700lbs

REF NO.	NCA330-1928	REF NO.		REF NO.	130-009-1804	REF NO.	
MH NO.	MTTC019	MH NO.		MH NO.	MTTD6006	MH NO.	

PUSH TYPE CLUTCH KITS
Medium Duty Truck

M1938-137 (330x1 1/2"x10 Single Plate)

Torque Rating: 520ft/lbs
Plate Load: 2400lbs

REF NO.	NCA330-1938	REF NO.		REF NO.	130-009-1904	REF NO.	
MH NO.	MTTC020	MH NO.		MH NO.	MTTD6005	MH NO.	

M1938-127 (330x1 3/8"x10 Single Plate)

Torque Rating: 400ft/lbs
Plate Load: 2400lbs

REF NO.	NCA330-1938	REF NO.		REF NO.	130-009-1903	REF NO.	
MH NO.	MTTC020	MH NO.		MH NO.	MTTD6007	MH NO.	

M1938-124 (330x1 3/8"x10 Single Plate)

Torque Rating: 400ft/lbs
Plate Load: 2400lbs

REF NO.	NCA330-1938	REF NO.		REF NO.	130-009-1019	REF NO.	
MH NO.	MTTC020	MH NO.		MH NO.	MTTD6008	MH NO.	

PUSH TYPE CLUTCH KITS
Medium Duty Truck

M104100-1 (365x1 3/4"x10 Single Plate)

Torque Rating: 520ft/lbs
Plate Load: 3200lbs

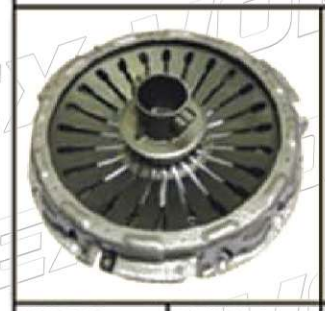

REF NO.	138006-1	REF NO.		REF NO.	128666	REF NO.	
MH NO.	MTTC021	MH NO.		MH NO.	MTTD	MH NO.	

M104100-2 (365x1 3/4"x10 Single Plate)

Torque Rating: 660ft/lbs
Plate Load: 3200lbs

REF NO.	138006-1	REF NO.		REF NO.	128666	REF NO.	
MH NO.	MTTC021	MH NO.		MH NO.	MTTD6009	MH NO.	

M104200-1 (365x1 3/4"x10 Two Plates)

Torque Rating: 860ft/lbs
Plate Load: 2500lbs

REF NO.	138005-1	REF NO.	FW-148	REF NO.	128698	REF NO.	128697
MH NO.	MTTC022	MH NO.	MTTP006	MH NO.	MTTD6010	MH NO.	MTTD6011

PUSH TYPE CLUTCH KITS
Medium Duty Truck

MH No.	Ref No.	Torque Rating (ft/lb)	Clutch Cover			Center Plate		Clutch Disc				
			MH No.	Ref No.	Plate Load(lb)	MH No.	Ref No.	MH No. (Front & Rear)	Ref No. (Front & Rear)	No.of Windows	Facing	Buttons
350MMx1 1/2"x10 Single Plate												
M107350-2	107350-2	500	MTTC005	102101	2400			MTTD006	103126	8	Ceramic	4P
M107350-3	107350-3	500	MTTC005	102101	2400			MTTD5013	103161	8	Ceramic	3P
M107621-1	107621-1	500	MTTC008	102048	2400			MTTD006	103126	8	Ceramic	4P
M107621-11	107621-1	420	MTTC008	102048	2400			MTTD005	128386	8	Organic	
350MMx1 3/4"x10 Single Plate												
M107350-1	107350-1	500	MTTC005	102101	2400			MTTD5012	103470	8	Ceramic	4P
M107621-2	107621-2	500	MTTC008	102048	2400			MTTD5012	103470	8	Ceramic	4P

Note: 102101—ø8.64-12 holes 375 PCD
102048—ø9.56-12 holes 393.7 PCD

VORTEX

PUSH TYPE CLUTCH KITS
Medium Duty Truck

M107350-2 (350x1 1/2"x10 Single Plate)

Torque Rating: 500ft/lbs
Plate Load: 2400lbs

REF NO.	102101	REF NO.		REF NO.	103126	REF NO.	
MH NO.	MTTC005	MH NO.		MH NO.	MTTD006	MH NO.	

M107350-3 (350x1 1/2"x10 Single Plate)

Torque Rating: 500ft/lbs
Plate Load: 2400lbs

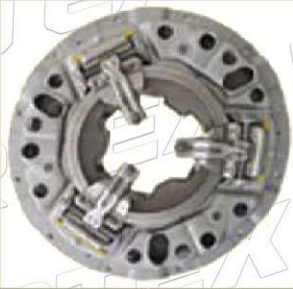

REF NO.	102101	REF NO.		REF NO.	103161	REF NO.	
MH NO.	MTTC005	MH NO.		MH NO.	MTTD5013	MH NO.	

M107621-1 (350x1 1/2"x10 Single Plate)

Torque Rating: 500ft/lbs
Plate Load: 2400lbs

REF NO.	102048	REF NO.		REF NO.	103126	REF NO.	
MH NO.	MTTC008	MH NO.		MH NO.	MTTD006	MH NO.	

PUSH TYPE CLUTCH KITS
Medium Duty Truck

M107621-11 (350x1 1/2"x10 Single Plate)

Torque Rating: 420ft/lbs
Plate Load: 2400lbs

REF NO.	102048	REF NO.		REF NO.	108386	REF NO.	
MH NO.	MTTC008	MH NO.		MH NO.	MTTD005	MH NO.	

M107350-1 (350x1 3/4"x10 Single Plate)

Torque Rating: 500ft/lbs
Plate Load: 2400lbs

REF NO.	102101	REF NO.		REF NO.	103470	REF NO.	
MH NO.	MTTC005	MH NO.		MH NO.	MTTD5012	MH NO.	

M107621-2 (350x1 3/4"x10 Single Plate)

Torque Rating: 500ft/lbs
Plate Load: 2400lbs

REF NO.	102048	REF NO.		REF NO.	103470	REF NO.	
MH NO.	MTTC008	MH NO.		MH NO.	MTTD5012	MH NO.	

14" CAST IRON CLUTCH KITS
Pot Flywheel Cast Cover Clutch

MH No.	Ref No.	Torque Rating (ft/lb)	Clutch Cover			Center Plate		Clutch Disc				
			MH No.	Ref No.	Plate Load(lb)	MH No.	Ref No.	MH No. (Front & Rear)	Ref No. (Front & Rear)	No.of Windows	Facing	Buttons
14"x1 3/4"x10 （6 Spring Cover）												
M107035-82	107035-82	1100	MTTC008-4	127400-4	3600	MTTP001	113C49	MTTD019/020	128343/128344	8	Organic	
M107063-59	107063-59	1150	MTTC008-1	127400-1	3200	MTTP001	113C49	MTTD033/034	128529/128530	8	Ceramic	4P
14"x2"x10 （6 Spring Cover）												
M107034-30	107034-30	1000	MTTC001-1	127390-1	3200	MTTP001	113C49	MTTD044/045	128310/128311	Rigid	Organic	
M107034-32	107034-32	1000	MTTC001-1	127390-1	3200	MTTP001	113C49	MTTD056/057	128238/128239	8	Organic	
M107950-59	107950-59	1400	MTTC001-1	127390-1	3200	MTTP001	113C49	MTTD062/063	128229/128230	8	Ceramic	4P
M107034-61	107034-61	1000	MTTC001-2	127390-2	2800	MTTP001	113C49	MTTD058/059	128441/128442	8	Ceramic	3P
14"x1 3/4"x10 （9 Spring Cover）												
M108035-82	108035-82	1100	MTTC016-4	147800-4	3600	MTTP001	113C49	MTTD019/020	128343/128344	8	Organic	
M108063-59	108063-59	1400	MTTC016-4	147800-4	3600	MTTP001	113C49	MTTD033/034	128529/128530	8	Ceramic	4P
14"x2"x10 （9 Spring Cover）												
M108034-82	108034-82	1100	MTTC017-4	147890-4	3600	MTTP001	113C49	MTTD056/057	128238/128239	8	Organic	
M108050-59	108050-59	1400	MTTC017-1	147890-1	3200	MTTP001	113C49	MTTD062/063	128229/128230	8	Ceramic	4P
M108034-61	108034-61	1150	MTTC017-1	147890-1	3200	MTTP001	113C49	MTTD058/059	128441/128442	8	Ceramic	3P
M108950-59	108950-59	1400	MTTC017-1	147890-1	3200	MTTP001	113C49	MTTD062/063	128229/128230	8	Ceramic	4P

14" CAST IRON CLUTCH KITS
Pot Flywheel Cast Cover Clutch

M107035-82 (14"x1 3/4"x10, 6 Spring Cover)

Torque Rating: 1100ft/lbs
Plate Load: 3600lbs

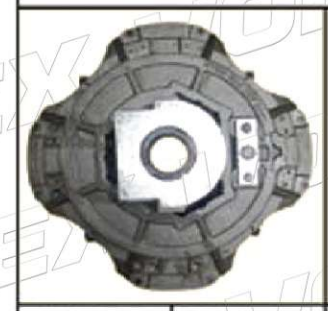

REF NO.	127400-4	REF NO.	113C49	REF NO.	128343	REF NO.	CD128344
MH NO.	MTTC008-4	MH NO.	MTTP001	MH NO.	MTTD019	MH NO.	MTTD020

M107063-59 (14"x1 3/4"x10, 6 Spring Cover)

Torque Rating: 1150ft/lbs
Plate Load: 3200lbs

REF NO.	127400-1	REF NO.	113C49	REF NO.	128529	REF NO.	128530
MH NO.	MTTC008-1	MH NO.	MTTP001	MH NO.	MTTD033	MH NO.	MTTD034

M107034-30 (14"x2"x10, 6 Spring Cover)

Torque Rating: 1000ft/lbs
Plate Load: 3200lbs

REF NO.	127390-1	REF NO.	113C49	REF NO.	128310	REF NO.	128311
MH NO.	MTTC001-1	MH NO.	MTTP001	MH NO.	MTTD044	MH NO.	MTTD045

14" CAST IRON CLUTCH KITS
Pot Flywheel Cast Cover Clutch

M107034-32 (14"x2"x10, 6 Spring Cover)

Torque Rating: 1000ft/lbs
Plate Load: 3200lbs

REF NO.	127390-1	REF NO.	113C49	REF NO.	128238	REF NO.	128239
MH NO.	MTTC001-1	MH NO.	MTTP001	MH NO.	MTTD056	MH NO.	MTTD057

M107050-59 (14"x2"x10, 6 Spring Cover)

Torque Rating: 1400ft/lbs
Plate Load: 3200lbs

REF NO.	127390-1	REF NO.	113C49	REF NO.	128229	REF NO.	128230
MH NO.	MTTC001-1	MH NO.	MTTP001	MH NO.	MTTD062	MH NO.	MTTD063

M107034-61 (14"x2"x10, 6 Spring Cover)

Torque Rating: 1400ft/lbs
Plate Load: 2800lbs

REF NO.	CA-127390-2	REF NO.	PL-1603	REF NO.	CD128441	REF NO.	CD128442
MH NO.	MTTC003	MH NO.	MTTP001	MH NO.	MTTD058	MH NO.	MTTD059

14" CAST IRON CLUTCH KITS

Pot Flywheel Cast Cover Clutch

M108035-82 (14"x1.75"x10, 9 Spring Cover)

Torque Rating: 1100ft/lbs
Plate Load: 3600lbs

REF NO.	147800-4	REF NO.	113C49	REF NO.	128343	REF NO.	CD128344
MH NO.	MTTC016-4	MH NO.	MTTP001	MH NO.	MTTD019	MH NO.	MTTD020

M108063-59 (14"x1.75"x10, 9 Spring Cover)

Torque Rating: 1150ft/lbs
Plate Load: 3200lbs

REF NO.	147800-1	REF NO.	113C49	REF NO.	128529	REF NO.	128530
MH NO.	MTTC016-1	MH NO.	MTTP001	MH NO.	MTTD033	MH NO.	MTTD034

M108034-82 (14"x2"x10, 9 Spring Cover)

Torque Rating: 1100ft/lbs
Plate Load: 3600lbs

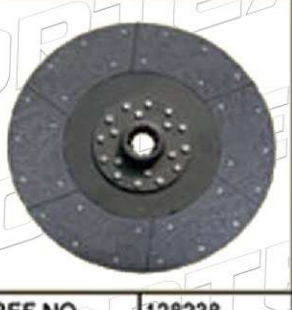
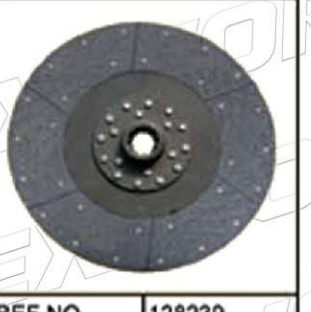

REF NO.	147890-4	REF NO.	113C49	REF NO.	128238	REF NO.	128239
MH NO.	MTTC017-4	MH NO.	MTTP001	MH NO.	MTTD056	MH NO.	MTTD057

14" CAST IRON CLUTCH KITS

Pot Flywheel Cast Cover Clutch

M108050-59 (14"x2"x10, 9 Spring Cover)

Torque Rating: 1400ft/lbs
Plate Load: 3200lbs

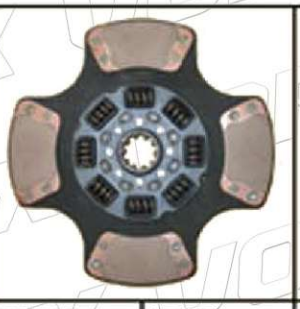

REF NO.	147890-1	REF NO.	113C49	REF NO.	128229	REF NO.	128230
MH NO.	MTTC017-1	MH NO.	MTTP001	MH NO.	MTTD062	MH NO.	MTTD063

M108034-61 (14"x2"x10, 9 Spring Cover)

Torque Rating: 1400ft/lbs
Plate Load: 2800lbs

REF NO.	147890-1	REF NO.	PL-1603	REF NO.	CD128441	REF NO.	CD128442
MH NO.	MTTC017-1	MH NO.	MTTP001	MH NO.	MTTD058	MH NO.	MTTD059

M108950-59 (14"x2"x10, 9 Spring Cover)

Torque Rating: 1400ft/lbs
Plate Load: 3200lbs

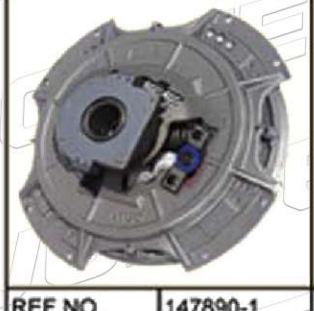

REF NO.	147890-1	REF NO.	113C49	REF NO.	128229	REF NO.	128230
MH NO.	MTTC017-1	MH NO.	MTTP001	MH NO.	MTTD062	MH NO.	MTTD063

14" STAMPED STEEL CLUTCH KITS
Flat Flywheel Cast Cover Clutch

MH No.	Ref No.	Torque Rating (ft/lb)	Clutch Cover			Center Plate		Clutch Disc				
			MH No.	Ref No.	Plate Load(lb)	MH No.	Ref No.	MH No. (Front & Rear)	Ref No. (Front & Rear)	No.of Windows	Facing	Buttons
14"x1 1/2"x10 Angle Spring Single Plate												
M107688-16	107688-16	450	MTTC014-3	129710-3	2500			MTTD005	128386	8	Organic	
M107688-7	107688-7	520	MTTC014-3	129710-3	2500			MTTD004	128499	8	Ceramic	3P
14"x1 3/4"x10 Angle Spring Single Plate												
M107683-5	107683-5	650	MTTC009-1	129059-1	3200			MTTD030	128668	8	Ceramic	3Trp
M107684-5	1076834-5	650	MTTC009-1	129059-1	3200			MTTD042	128577	8	Ceramic	3P
M107401-1	107401-1	650	MTTC010-2	129060-2	2800			MTTD032	127405	8	Ceramic	4P
14"x1 3/4"x10 Angle Spring Two Plates												
M107237-10	107237-10	900	MTTC010-5	129060-5	2000	MTTP005	125197	MTTD029/030	128667/128668	8	Ceramic	3Trp
M107237-16	107237-16	800	MTTC010-2	129060-2	2800	MTTP005	125197	MTTD019/020	128343/128344	8	Organic	
M107237-22	107237-22	860	MTTC010-3	129060-3	2500	MTTP005	125197	MTTD027/028	128616/128617	8	Ceramic	3P
M107237-24	107237-24	1050	MTTC010-3	129060-3	2500	MTTP005	125197	MTTD031/032	127404/127405	8	Ceramic	4P
14"x2"x10 Angle Spring Two Plates												
M107342-11	107342-11	900	MTTC015-5	129061-5	2000	MTTP005	125197	MTTD060/061	128594/128595	8	Organic	3Trp
M107342-20	107342-20	1050	MTTC015-3	129061-3	2500	MTTP005	125197	MTTD062/063	128229/128230	8	Ceramic	4P
M107342-22	107342-22	950	MTTC015-3	129061-3	2500	MTTP005	125197	MTTD058/059	128441/128442	8	Organic	3P
14"x1 3/4"x10 Solo Single Plate												
M109400-5	109400-5	650	MTTC012-12	139000-12	3200			MTTD042	128577	8	Ceramic	3P
14"x1 3/4"x10 Solo Two Plates												
M109500-10	109500-10	900	MTTC013-5	139001-5	2000	MTTP005	125197	MTTD029/030	128667/128668	8	Ceramic	3Trp
M109500-22	109500-22	860	MTTC013-3	139001-3	2500	MTTP005	125197	MTTD027/028	128616/128617	8	Ceramic	3P

VORTEX

14" STAMPED STEEL CLUTCH KITS
Flat Flywheel Cast Cover Clutch

M107688-16 (14"x1 1/2"x10 Single Plate)

Torque Rating: 450ft/lbs
Plate Load: 2500lbs

REF NO.	129710-3	REF NO.		REF NO.	108386	REF NO.	
MH NO.	MTTC014-3	MH NO.		MH NO.	MTTD005	MH NO.	

M107688-7 (14"x1 1/2"x10 Single Plate)

Torque Rating: 520ft/lbs
Plate Load: 2500lbs

REF NO.	129710-3	REF NO.		REF NO.	128499	REF NO.	
MH NO.	MTTC014-3	MH NO.		MH NO.	MTTD004	MH NO.	

M107683-5 (14"x1 3/4"x10 Single Plate)

Torque Rating: 650ft/lbs
Plate Load: 3200lbs

REF NO.	129059-1	REF NO.		REF NO.	128668	REF NO.	
MH NO.	MTTC009-1	MH NO.		MH NO.	MTTD030	MH NO.	

14" STAMPED STEEL CLUTCH KITS
Flat Flywheel Cast Cover Clutch

M107684-5 (14"x1 3/4"x10 Single Plate)

Torque Rating: 650ft/lbs
Plate Load: 3200lbs

REF NO.	129059-1	REF NO.		REF NO.	128577	REF NO.	
MH NO.	MTTC009-1	MH NO.		MH NO.	MTTD042	MH NO.	

M107401-1 (14"x1 3/4"x10 Single Plate)

Torque Rating: 650ft/lbs
Plate Load: 2800lbs

REF NO.	129060-2	REF NO.		REF NO.	127405	REF NO.	
MH NO.	MTTC010-2	MH NO.		MH NO.	MTTD032	MH NO.	

M107237-10 (14"x1 3/4"x10 Two Plates)

Torque Rating: 900ft/lbs
Plate Load: 2000lbs

REF NO.	129060-5	REF NO.	125197	REF NO.	128667	REF NO.	128668
MH NO.	MTTC010-5	MH NO.	MTTP005	MH NO.	MTTD029	MH NO.	MTTD030

14" STAMPED STEEL CLUTCH KITS
Flat Flywheel Cast Cover Clutch

M107237-16 (14"x1 3/4"x10 Two Plates)

Torque Rating: 800ft/lbs
Plate Load: 2800lbs

REF NO.	129060-2	REF NO.	125197	REF NO.	128343	REF NO.	128344
MH NO.	MTTC010-2	MH NO.	MTTP005	MH NO.	MTTD019	MH NO.	MTTD020

M107237-22 (14"x1 3/4"x10 Two Plates)

Torque Rating: 860ft/lbs
Plate Load: 2500lbs

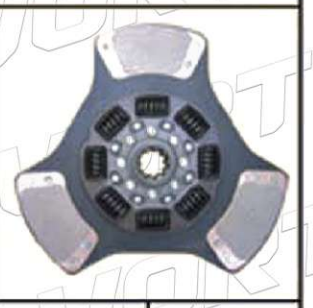

REF NO.	129060-3	REF NO.	125197	REF NO.	128616	REF NO.	128617
MH NO.	MTTC010-3	MH NO.	MTTP005	MH NO.	MTTD027	MH NO.	MTTD028

M107237-24 (14"x1 3/4"x10 Two Plates)

Torque Rating: 1050ft/lbs
Plate Load: 2500lbs

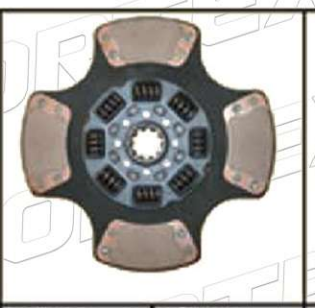

REF NO.	129060-3	REF NO.	125197	REF NO.	127404	REF NO.	127405
MH NO.	MTTC010-3	MH NO.	MTTP005	MH NO.	MTTD031	MH NO.	MTTD032

14" STAMPED STEEL CLUTCH KITS
Flat Flywheel Cast Cover Clutch

M107342-11 (14"x2"x10 Two Plates)

Torque Rating: 900ft/lbs
Plate Load: 2000lbs

REF NO.	129061-5	REF NO.	125197	REF NO.	128594	REF NO.	128595
MH NO.	MTTC015-5	MH NO.	MTTP005	MH NO.	MTTD060	MH NO.	MTTD061

M107342-20 (14"x2"x10 Two Plates)

Torque Rating: 1050ft/lbs
Plate Load: 2500lbs

REF NO.	129061-3	REF NO.	125197	REF NO.	128229	REF NO.	128230
MH NO.	MTTC015-3	MH NO.	MTTP005	MH NO.	MTTD062	MH NO.	MTTD063

M107342-22 (14"x2"x10 Two Plates)

Torque Rating: 950ft/lbs
Plate Load: 2500lbs

REF NO.	129061-3	REF NO.	125197	REF NO.	CD128441	REF NO.	CD128442
MH NO.	MTTC015-3	MH NO.	MTTP005	MH NO.	MTTD058	MH NO.	MTTD059

VORTEX

14" STAMPED STEEL CLUTCH KITS
Flat Flywheel Cast Cover Clutch

M109400-5 (14"x1 3/4"x10 Single Plate)

Torque Rating: 650ft/lbs
Plate Load: 3200lbs

REF NO.	139000-12	REF NO.		REF NO.	128577	REF NO.	
MH NO.	MTTC012-12	MH NO.		MH NO.	MTTD042	MH NO.	

M109500-10 (14"x1 3/4"x10 Two Plates)

Torque Rating: 900ft/lbs
Plate Load: 2000lbs

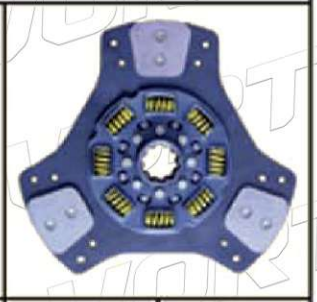

REF NO.	139001-5	REF NO.	125197	REF NO.	128667	REF NO.	128668
MH NO.	MTTC013-5	MH NO.	MTTP005	MH NO.	MTTD029	MH NO.	MTTD030

M109500-22 (14"x1 3/4"x10 Two Plates)

Torque Rating: 860ft/lbs
Plate Load: 2500lbs

REF NO.	139001-3	REF NO.	125197	REF NO.	128616	REF NO.	128617
MH NO.	MTTC013-3	MH NO.	MTTP005	MH NO.	MTTD027	MH NO.	MTTD028

15 1/2" CAST IRON CLUTCH KITS
Flat Flywheel Cast Cover Clutch

MH No.	Ref No.	Torque Rating (ft/lb)	Clutch Cover			Center Plate		Clutch Disc				
			MH No.	Ref No.	Plate Load(lb)	MH No.	Ref No.	MH No. (Front & Rear)	Ref No. (Front & Rear)	No.of Windows	Facing	Buttons

15 1/2"x2"x10 （6 Spring Cover）

M107091-21	107091-21	1100	MTTC002-4	127597-4	3600	MTTP003	113C166	MTTD090/091	128067/128068	Rigid	Ceramic	6VTL
M107091-35	107091-35	1100	MTTC006-4	129018-4	3600	MTTP004	113C165	MTTD084/085	128322/128323	Rigid	Organic	
M107091-55	107091-55	1400	MTTC002-4	127597-4	3600	MTTP003	113C166	MTTD100/101	128049/128050	8	Ceramic	6VTL
M107091-77	107091-77	1250	MTTC006-4	129018-4	3600	MTTP004	113C165	MTTD094/095	128431/128432	8	Organic	
M107091-81	107091-81	1400	MTTC002-4	127597-4	3600	MTTP003	113C166	MTTD098/099	128519/128520	8	Ceramic	4P
M107925-82	107925-82	1650	MTTC002-4	127597-4	3600	MTTP003	113C166	MTTD5009 F/R	128462 F/R	7	Ceramic	4P
M107925-70	107925-70	1750	MTTC002-6	127597-6	4000	MTTP003	113C166	MTTD5011 F/R	128541F/R	7	Ceramic	6P
M107935-51	107935-51	1650	MTTC002-4	127597-4	3600	MTTP003	113C166	MTTD5007/5008	128362/128363	9	Ceramic	4P
M107935-91	107935-91	1650	MTTC002-4	127597-4	3600	MTTP003	113C166	MTTD5017/5018	128537/128538	9	Ceramic	6P
M107391-78	107391-78	1450	MTTC006-6	129018-6	4000	MTTP004	113C165	MTTD5019/5020	128445/128446	10	Organic	
M107091-74	107091-74	1650	MTTC002-4	127597-4	3600	MTTP003	113C166	MTTD5005/5006	128257/128258	10	Ceramic	4P
M107391-93	107391-93	1810	MTTC002-6	127597-6	4000	MTTP003	113C166	MTTD5015/5016	128539/128540	10	Ceramic	6P

15 1/2"x2"x10 （9 Spring Cover）

M108391-21	108391-21	1100	MTTC004-4	157700-4Z	3600	MTTP003	113C166	MTTD5021/5022	128297/128298	Rigid	Ceramic	4P
M108391-35	108091-35	1100	MTTC011-4	157020-4Z	3600	MTTP004	113C165	MTTD084/085	128322/128323	Rigid	Organic	
M108391-77	108391-77	1250	MTTC011-4	157020-4Z	3600	MTTP004	113C165	MTTD094/095	128431/128432	8	Organic	
M108391-81	108391-81	1400	MTTC004-4	157700-4Z	3600	MTTP003	113C166	MTTD098/099	128519/128520	8	Ceramic	4P
M108925-82	108925-82	1650	MTTC004-4	157700-4Z	3600	MTTP003	113C166	MTTD5009 F/R	128462 F/R	7	Ceramic	4P
M108925-85	108925-85	1700	MTTC004-4	157700-4Z	3600	MTTP003	113C166	MTTD5011 F/R	128541F/R	7	Ceramic	6P
M108935-51	108935-51	1650	MTTC004-4	157700-4Z	3600	MTTP003	113C166	MTTD5007/5008	128362/128363	9	Ceramic	4P
M108935-91	108935-91	1650	MTTC004-4	157700-4Z	3600	MTTP003	113C166	MTTD5017/5018	128537/128538	9	Ceramic	6P
M108935-78	108935-78	1450	MTTC011-6	157020-6Z	4000	MTTP004	113C165	MTTD5019/5020	128445/128446	10	Organic	
M108391-74	108391-74	1650	MTTC004-4	157700-4Z	3600	MTTP003	113C166	MTTD5005/5006	128257/128258	10	Ceramic	4P
M108391-93	108391-93	1810	MTTC004-6	157700-6Z	4000	MTTP003	113C166	MTTD5015/5016	128539/128540	10	Ceramic	6P
M108935-15	108935-15	2050	MTTC004-6	157700-6Z	4000	MTTP003	113C166	MTTD5010 F/R	128709F/R	7VCT	Ceramic	6P

VORTEX

15 1/2" CAST IRON CLUTCH KITS
Flat Flywheel Cast Cover Clutch

M107091-21 (15 1/2"x2"x10, 6 Spring Cover)

Torque Rating: 1100ft/lbs
Plate Load: 3600lbs

REF NO.	127597-4	REF NO.	113C166	REF NO.	128067	REF NO.	128068
MH NO.	MTTC002-4	MH NO.	MTTP003	MH NO.	MTTD090	MH NO.	MTTD091

M107091-35 (15 1/2"x2"x10, 6 Spring Cover)

Torque Rating: 1100ft/lbs
Plate Load: 3600lbs

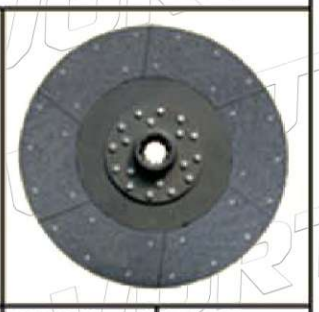

REF NO.	129018-4	REF NO.	113C165	REF NO.	128322	REF NO.	128323
MH NO.	MTTC006-4	MH NO.	MTTP004	MH NO.	MTTD084	MH NO.	MTTD085

M107091-55 (15 1/2"x2"x10, 6 Spring Cover)

Torque Rating: 1400ft/lbs
Plate Load: 3600lbs

REF NO.	127597-4	REF NO.	113C166	REF NO.	128049	REF NO.	128050
MH NO.	MTTC002-4	MH NO.	MTTP003	MH NO.	MTTD100	MH NO.	MTTD101

15 1/2" CAST IRON CLUTCH KITS
Flat Flywheel Cast Cover Clutch

M107091-77 (15 1/2"x2"x10, 6 Spring Cover)

Torque Rating: 1250ft/lbs
Plate Load: 3600lbs

REF NO.	129018-4	REF NO.	113C165	REF NO.	128431	REF NO.	128432
MH NO.	MTTC006-4	MH NO.	MTTP004	MH NO.	MTTD094	MH NO.	MTTD095

M107091-81 (15 1/2"x2"x10, 6 Spring Cover)

Torque Rating: 1400ft/lbs
Plate Load: 3600lbs

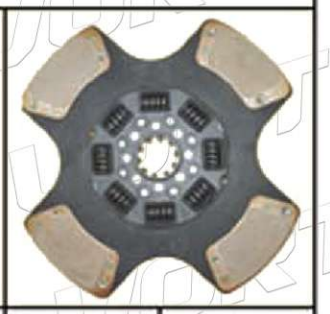

REF NO.	127597-4	REF NO.	113C166	REF NO.	128519	REF NO.	128520
MH NO.	MTTC002-4	MH NO.	MTTP003	MH NO.	MTTD098	MH NO.	MTTD099

M107925-82 (15 1/2"x2"x10, 6 Spring Cover)

Torque Rating: 1650ft/lbs
Plate Load: 3600lbs

REF NO.	127597-4	REF NO.	113C166	REF NO.	128462	REF NO.	128462
MH NO.	MTTC002-4	MH NO.	MTTP003	MH NO.	MTTD5009	MH NO.	MTTD5009

15 1/2" CAST IRON CLUTCH KITS
Flat Flywheel Cast Cover Clutch

M107925-70 (15 1/2"x2"x10, 6 Spring Cover)

Torque Rating: 1750ft/lbs
Plate Load: 4000lbs

REF NO.	127597-6	REF NO.	113C166	REF NO.	128541	REF NO.	128541
MH NO.	MTTC002-6	MH NO.	MTTP003	MH NO.	MTTD5011	MH NO.	MTTD5011

M107935-51 (15 1/2"x2"x10, 6 Spring Cover)

Torque Rating: 1650ft/lbs
Plate Load: 3600lbs

REF NO.	127597-4	REF NO.	113C166	REF NO.	128362	REF NO.	128363
MH NO.	MTTC002-4	MH NO.	MTTP003	MH NO.	MTTD5007	MH NO.	MTTD5008

M107935-91 (15 1/2"x2"x10, 6 Spring Cover)

Torque Rating: 1650ft/lbs
Plate Load: 3600lbs

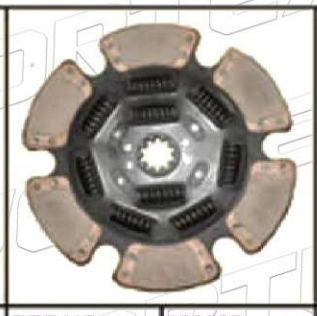

REF NO.	127597-4	REF NO.	113C166	REF NO.	128537	REF NO.	128538
MH NO.	MTTC002-4	MH NO.	MTTP003	MH NO.	MTTD5017	MH NO.	MTTD5018

VORTEX

15 1/2" CAST IRON CLUTCH KITS
Flat Flywheel Cast Cover Clutch

M107391-78 (15 1/2"x2"x10, 6 Spring Cover)

Torque Rating: 1450ft/lbs
Plate Load: 4000lbs

REF NO.	129018-6	REF NO.	113C165	REF NO.	128445	REF NO.	128446
MH NO.	MTTC006-6	MH NO.	MTTP004	MH NO.	MTTD5019	MH NO.	MTTD5020

M107091-74 (15 1/2"x2"x10, 6 Spring Cover)

Torque Rating: 1650ft/lbs
Plate Load: 3600lbs

REF NO.	127597-4	REF NO.	113C166	REF NO.	128257	REF NO.	128258
MH NO.	MTTC002-4	MH NO.	MTTP003	MH NO.	MTTD5005	MH NO.	MTTD5006

M107391-93 (15 1/2"x2"x10, 6 Spring Cover)

Torque Rating: 1810ft/lbs
Plate Load: 4000lbs

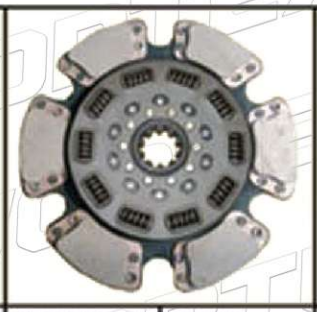

REF NO.	127597-6	REF NO.	113C166	REF NO.	128539	REF NO.	128540
MH NO.	MTTC002-6	MH NO.	MTTP003	MH NO.	MTTD5015	MH NO.	MTTD5016

15 1/2" CAST IRON CLUTCH KITS
Flat Flywheel Cast Cover Clutch

M108391-21 (15 1/2"x2"x10, 9 Spring Cover)

Torque Rating: 1100ft/lbs
Plate Load: 3600lbs

REF NO.	157700-4	REF NO.	113C166	REF NO.	128297	REF NO.	128298
MH NO.	MTTC004-4	MH NO.	MTTP003	MH NO.	MTTD5021	MH NO.	MTTD5022

M108931-35 (15 1/2"x2"x10, 9 Spring Cover)

Torque Rating: 1100ft/lbs
Plate Load: 3600lbs

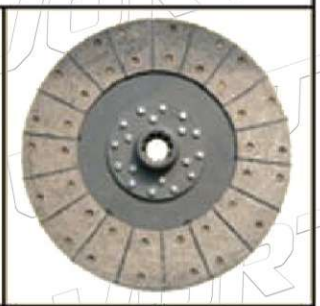

REF NO.	157020-4	REF NO.	113C165	REF NO.	128322	REF NO.	128323
MH NO.	MTTC011-4	MH NO.	MTTP004	MH NO.	MTTD084	MH NO.	MTTD085

M10391-77 (15 1/2"x2"x10, 9 Spring Cover)

Torque Rating: 1250ft/lbs
Plate Load: 3600lbs

REF NO.	157020-4	REF NO.	113C165	REF NO.	CD128431	REF NO.	CD128432
MH NO.	MTTC011-4	MH NO.	MTTP004	MH NO.	MTTD094	MH NO.	MTTD095

15 1/2" CAST IRON CLUTCH KITS
Flat Flywheel Cast Cover Clutch

M108391-81 (15 1/2"x2"x10, 9 Spring Cover)

Torque Rating: 1400ft/lbs
Plate Load: 3600lbs

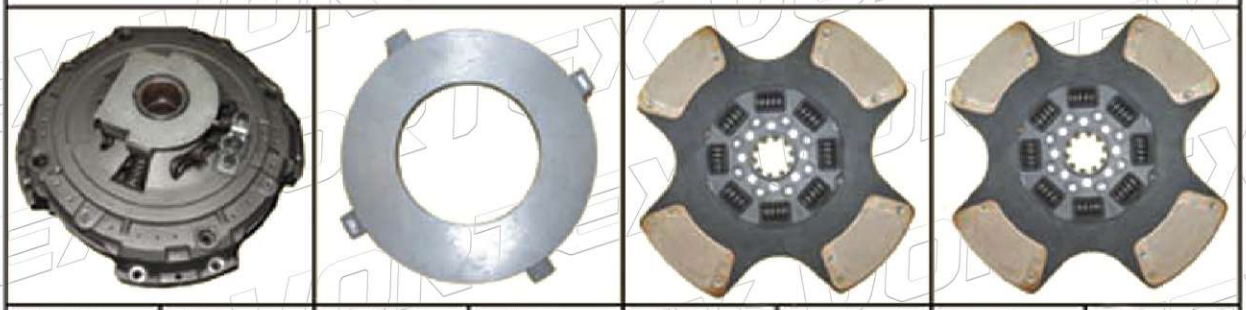

REF NO.	157700-4	REF NO.	113C166	REF NO.	128519	REF NO.	128520
MH NO.	MTTC004-4	MH NO.	MTTP003	MH NO.	MTTD098	MH NO.	MTTD099

M108925-82 (15 1/2"x2"x10, 9 Spring Cover)

Torque Rating: 1650ft/lbs
Plate Load: 3600lbs

REF NO.	157700-4	REF NO.	113C166	REF NO.	128462	REF NO.	128462
MH NO.	MTTC004-4	MH NO.	MTTP003	MH NO.	MTTD5009	MH NO.	MTTD5009

M108925-85 (15 1/2"x2"x10, 9 Spring Cover)

Torque Rating: 1700ft/lbs
Plate Load: 3600lbs

REF NO.	157700-4	REF NO.	113C166	REF NO.	128541	REF NO.	128541
MH NO.	MTTC004-4	MH NO.	MTTP003	MH NO.	MTTD5011	MH NO.	MTTD5011

15 1/2" CAST IRON CLUTCH KITS
Flat Flywheel Cast Cover Clutch

M108935-51 (15 1/2"x2"x10, 9 Spring Cover)

Torque Rating: 1650ft/lbs
Plate Load: 3600lbs

REF NO.	157700-4	REF NO.	113C166	REF NO.	128362	REF NO.	128363
MH NO.	MTTC004-4	MH NO.	MTTP003	MH NO.	MTTD5007	MH NO.	MTTD5008

M108935-91 (15 1/2"x2"x10, 9 Spring Cover)

Torque Rating: 1650ft/lbs
Plate Load: 3600lbs

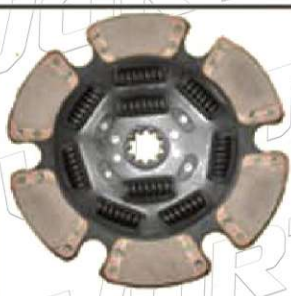

REF NO.	157700-4	REF NO.	113C166	REF NO.	128537	REF NO.	128538
MH NO.	MTTC004-4	MH NO.	MTTP003	MH NO.	MTTD5017	MH NO.	MTTD5018

M108935-78 (15 1/2"x2"x10, 9 Spring Cover)

Torque Rating: 1450ft/lbs
Plate Load: 4000lbs

REF NO.	107020-6	REF NO.	113C165	REF NO.	128445	REF NO.	128446
MH NO.	MTTC011-6	MH NO.	MTTP004	MH NO.	MTTD5019	MH NO.	MTTD5020

15 1/2" CAST IRON CLUTCH KITS

Flat Flywheel Cast Cover Clutch

M108391-74 (15 1/2"x2"x10, 9 Spring Cover)

Torque Rating: 1650ft/lbs
Plate Load: 3600lbs

REF NO.	157700-4	REF NO.	113C166	REF NO.	128257	REF NO.	128258
MH NO.	MTTC004-4	MH NO.	MTTP003	MH NO.	MTTD5005	MH NO.	MTTD5006

M108391-93 (15 1/2"x2"x10, 9 Spring Cover)

Torque Rating: 1810ft/lbs
Plate Load: 4000lbs

REF NO.	157700-6	REF NO.	113C166	REF NO.	128539	REF NO.	128540
MH NO.	MTTC004-6	MH NO.	MTTP003	MH NO.	MTTD5015	MH NO.	MTTD5016

M108935-15 (15 1/2"x2"x10, 9 Spring Cover)

Torque Rating: 2050ft/lbs
Plate Load: 4000lbs

REF NO.	157700-6	REF NO.	113C166	REF NO.	128709	REF NO.	128709
MH NO.	MTTC004-6	MH NO.	MTTP003	MH NO.	MTTD5010	MH NO.	MTTD5010

DIAPHRAG TYPE CLUTCH KITS
Heavy Duty Truck

MH No.	Ref No.	Torque Rating (ft/lb)	Clutch Cover			Center Plate		Clutch Disc				
			MH No.	Ref No.	Plate Load(lb)	MH No.	Ref No.	MH No. (Front & Rear)	Ref No. (Front & Rear)	No.of Windows	Facing	Buttons
14"x1 3/4"x10 （Diaphragm Cover）												
M108035-32-D	108035-32	1000	MTTC023-1	160054-1	3200	MTTP001	113C49	MTTD019/020	128343/128344	8	Organic	
M108063-59-D	108063-59	1150	MTTC023-1	160054-1	3200	MTTP001	113C49	MTTD033/034	128529/128530	8	Ceramic	4P
14"x2"x10 （Diaphragm Cover）												
M108034-82-D	108034-82	1100	MTTC024-4	160051-4	3600	MTTP001	113C49	MTTD056/057	128238/128239	8	Organic	
M108050-59-D	108050-59	1400	MTTC024-1	160051-1	3200	MTTP001	113C49	MTTD062/063	128229/128230	8	Ceramic	4P
M108034-61-D	108034-61	1150	MTTC024-1	160051-1	3200	MTTP001	113C49	MTTD058/059	128441/128442	8	Ceramic	3P
M108950-59-D	108950-59	1400	MTTC024-1	160051-1	3200	MTTP001	113C49	MTTD062/063	128229/128230	8	Ceramic	4P
15 1/2"x2"x10 （Diaphragm Cover）												
M108391-81-D	108391-81	1400	MTTC025-4	152705-4	3600	MTTP003	113C166	MTTD098/099	128519/128520	8	Ceramic	4P
M108925-82-D	108925-82	1650	MTTC026-4	151455-4	3600	MTTP003	113C166	MTTD5009 F/R	128462 F/R	7	Ceramic	4P
M108935-51-D	108935-51	1650	MTTC026-4	151455-4	3600	MTTP003	113C166	MTTD5007/5008	128362/128363	9	Ceramic	4P
M108935-91-D	108935-91	1650	MTTC026-4	151455-4	3600	MTTP003	113C166	MTTD5017/5018	128537/128538	9	Ceramic	6P
M108391-74-D	108391-74	1650	MTTC025-4	152705-4	3600	MTTP003	113C166	MTTD5005/5006	128257/128258	10	Ceramic	4P
M108391-93-D	108391-93	1810	MTTC025-6	152705-6	4000	MTTP003	113C166	MTTD5015/5016	128539/128540	10	Ceramic	6P

VORTEX

DIAPHRAG TYPE CLUTCH KITS
Heavy Duty Truck

M108035-32-D (14"x1.75"x10, Diaphragm Cover)

Torque Rating: 1000ft/lbs
Plate Load: 3200lbs

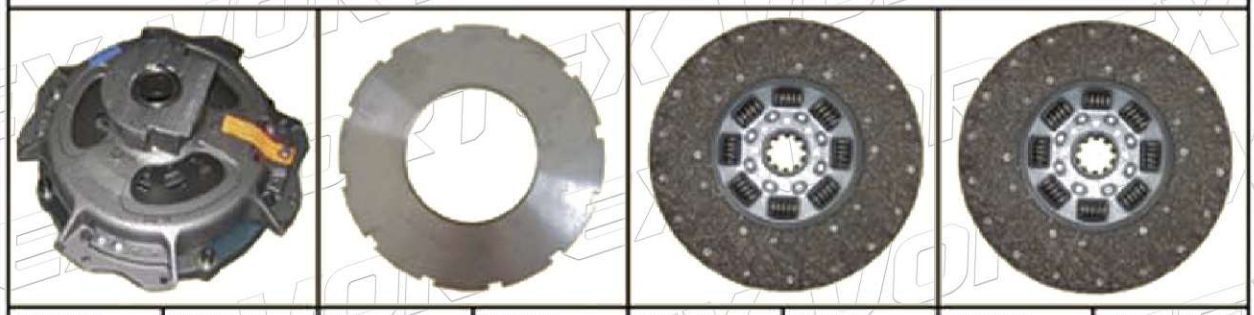

REF NO.	160054-1	REF NO.	113C49	REF NO.	128343	REF NO.	CD128344
MH NO.	MTTC023-1	MH NO.	MTTP001	MH NO.	MTTD019	MH NO.	MTTD020

M108063-59-D (14"x1.75"x10, Diaphragm Cover)

Torque Rating: 1150ft/lbs
Plate Load: 3200lbs

REF NO.	160054-1	REF NO.	113C49	REF NO.	128529	REF NO.	128530
MH NO.	MTTC023-1	MH NO.	MTTP001	MH NO.	MTTD033	MH NO.	MTTD034

M108034-82-D (14"x2"x10, Diaphragm Cover)

Torque Rating: 1100ft/lbs
Plate Load: 3600lbs

REF NO.	D	REF NO.	113C49	REF NO.	128238	REF NO.	128239
MH NO.	MTTC024-4	MH NO.	MTTP001	MH NO.	MTTD056	MH NO.	MTTD057

DIAPHRAG TYPE CLUTCH KITS

Heavy Duty Truck

M108050-59-D (14"x2"x10, Diaphragm Cover)

Torque Rating: 1400ft/lbs
Plate Load: 3200lbs

REF NO.	165001-1	REF NO.	113C49	REF NO.	128229	REF NO.	128230
MH NO.	MTTC024-1	MH NO.	MTTP001	MH NO.	MTTD062	MH NO.	MTTD063

M108034-61-D (14"x2"x10, Diaphragm Cover)

Torque Rating: 1150ft/lbs
Plate Load: 3200lbs

REF NO.	160051-1	REF NO.	PL-1603	REF NO.	CD128441	REF NO.	CD128442
MH NO.	MTTC024-1	MH NO.	MTTP001	MH NO.	MTTD058	MH NO.	MTTD059

M108950-59-D (14"x2"x10, Diaphragm Cover)

Torque Rating: 1400ft/lbs
Plate Load: 3200lbs

REF NO.	160051-1	REF NO.	113C49	REF NO.	128229	REF NO.	128230
MH NO.	MTTC024-1	MH NO.	MTTP001	MH NO.	MTTD062	MH NO.	MTTD063

VORTEX

DIAPHRAG TYPE CLUTCH KITS
Heavy Duty Truck

M108391-81-D (15 1/2"x2"x10, Diaphragm Cover)

Torque Rating: 1400ft/lbs
Plate Load: 3600lbs

REF NO.	152705-4	REF NO.	113C166	REF NO.	128519	REF NO.	128520
MH NO.	MTTC025-4	MH NO.	MTTP003	MH NO.	MTTD098	MH NO.	MTTD099

M108925-82-D (15 1/2"x2"x10, Diaphragm Cover)

Torque Rating: 1650ft/lbs
Plate Load: 3600lbs

REF NO.	151455-4	REF NO.	113C166	REF NO.	128462	REF NO.	128462
MH NO.	MTTC026-4	MH NO.	MTTP003	MH NO.	MTTD5009	MH NO.	MTTD5009

M108935-51-D (15 1/2"x2"x10, Diaphragm Cover)

Torque Rating: 1650ft/lbs
Plate Load: 3600lbs

REF NO.	151455-4	REF NO.	113C166	REF NO.	128362	REF NO.	128363
MH NO.	MTTC026-4	MH NO.	MTTP003	MH NO.	MTTD5007	MH NO.	MTTD5008

VORTEX

DIAPHRAG TYPE CLUTCH KITS
Heavy Duty Truck

M108935-91-D (15 1/2"x2"x10, Diaphragm Cover)

Torque Rating: 1650ft/lbs
Plate Load: 3600lbs

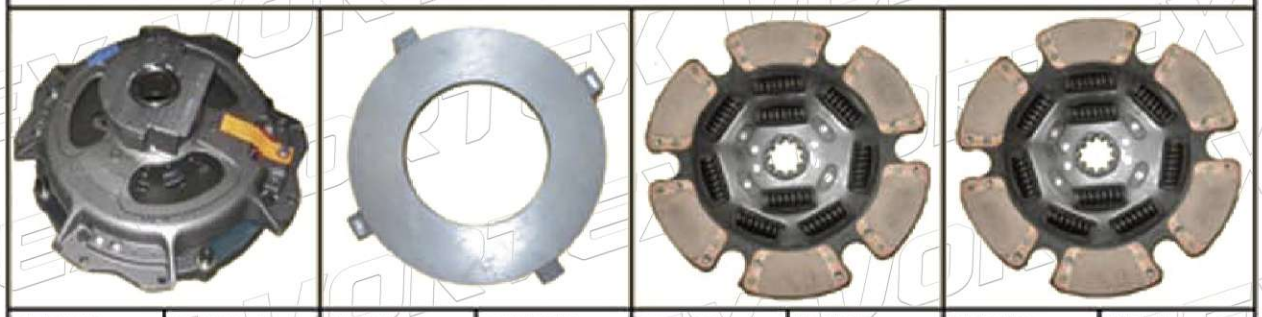

REF NO.	151455-4	REF NO.	113C166	REF NO.	128537	REF NO.	128538
MH NO.	MTTC026-4	MH NO.	MTTP003	MH NO.	MTTD5017	MH NO.	MTTD5018

M108391-74-D (15 1/2"x2"x10, Diaphragm Cover)

Torque Rating: 1650ft/lbs
Plate Load: 3600lbs

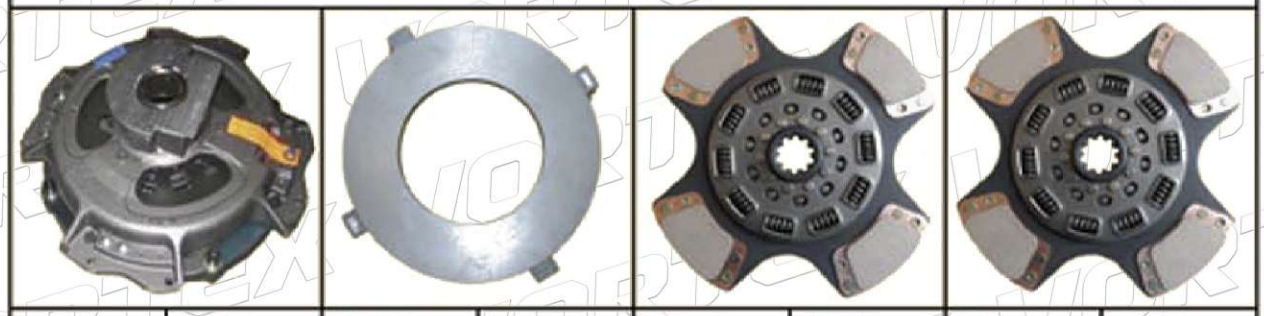

REF NO.	152705-4	REF NO.	113C166	REF NO.	128257	REF NO.	128258
MH NO.	MTTC025-4	MH NO.	MTTP003	MH NO.	MTTD5005	MH NO.	MTTD5006

M108391-93-D (15 1/2"x2"x10, Diaphragm Cover)

Torque Rating: 1810ft/lbs
Plate Load: 4000lbs

REF NO.	152705-6	REF NO.	113C166	REF NO.	128539	REF NO.	128540
MH NO.	MTTC025-6	MH NO.	MTTP003	MH NO.	MTTD5015	MH NO.	MTTD5016

CLUTCH BRAKES

MH No.	Ref No.	Description	Picture
ONE OR TWO-PIECE CLUTCH BRAKES			
M127175	127175	Clutch Brake,1-3/4" Two-Piece	M127175 M127187
M127187	127187	Clutch Brake,1-3/4" One-Piece	
M127200	127200	Clutch Brake,2" Two-Piece	M127200 M127237
M127237	127237	Clutch Brake,2" One-Piece	
TORQUE LIMITING CLUTCH BRAKES			
M127740	127740	Clutch Brake,1-3/4" Torque Limiting(.380" thick)	M127740 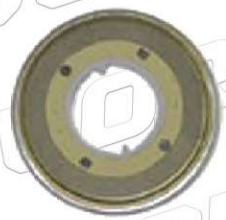 M127760
M127740500	127740	Clutch Brake,1-3/4" Torque Limiting(.500" thick)	
M127760	127760	Clutch Brake,2" Torque Limiting(.380" thick)	
M127760450	127760	Clutch Brake,2" Torque Limiting(.450" thick)	
M127760500	127760	Clutch Brake,2" Torque Limiting(.500" thick)	

Encuéntranos aquí